SINERGI Vol. 30, No. 3, October 2026: 837-850
http://publikasi.mercubuana.ac.id/index.php/sinergi
http://doi.org/10.22441/sinergi.2026.3.012

Voltage and frequency stability assessment of medium-voltage distribution systems under high penetration of solar PV: A Case Study of EDTL RAEOA Timor-Leste

Jose Alexandre Bana[1,2], Abraham Lomi[3],*, Widodo Pudji Muljanto[3], Awan Uji Krismanto[3]
[1]Student of Graduate Program of Electrical Engineering, Institut Teknologi Nasional Malang, Indonesia
[2]Região Administrativa Especial de Oé-Cusse Ambeno (RAEOA), Electricidade de Timor-Leste (EDTL), Timor-Leste
[3]Gradute Program of Electrical Engineering, Institut Teknologi Nasional Malang, Indonesia

Abstract
To reduce dependence on diesel-based power generation and associated carbon emissions, the Government of Timor-Leste has initiated the development of a 15 MWp on-grid solar photovoltaic (PV) power plant within the EDTL RAEOA operational area. While this initiative supports the national clean energy transition and rising electricity demand, high PV penetration poses voltage and frequency stability challenges, particularly in medium-voltage distribution networks of small island power systems. This study presents the first comprehensive assessment of voltage and frequency stability resulting from the integration of a 15 MWp on-grid PV system into the real 20 kV EDTL RAEOA distribution network. The analysis is conducted under both steady-state and dynamic operating conditions using a case-study-based simulation approach. System performance before and after PV integration is evaluated to quantify changes in power quality and stability. The results indicate a substantial improvement in voltage profiles following PV integration. The minimum voltage level increases from 92.36% under pre-integration conditions at Bus 151 to 96.99% at Bus 212 after PV connection, demonstrating effective voltage recovery within the distribution network. Frequency response remains within acceptable limits under dynamic disturbances, indicating that high PV penetration does not adversely affect frequency stability. By simultaneously evaluating voltage and frequency stability at the medium-voltage level, this study provides a more comprehensive stability assessment than most existing PV integration studies, which often focus on a single domain or higher-voltage systems. The findings confirm the technical feasibility of large-scale PV integration in weak and isolated distribution networks and offer practical insights for renewable energy deployment in small island power systems such as Timor-Leste.

This is an open-access article under the CC BY-SA license

Keywords:
Frequency Stability;
Renewable Energy Penetration;
Timor-Leste Power System;
Solar Photovoltaic (PV) Integration;
Voltage Stability;

Article History:
Received: September 23, 2025
Revised 1: January 8, 2026
Accepted: March 22, 2026
Published: October 2, 2026

Corresponding Author:
Abraham Lomi
Graduate Program, Department of Electrical Engineering, Institut Teknologi Nasional, Malang, Indonesia
Email:
abraham@lecturer.itn.ac.id

INTRODUCTION

The utilization of electrical energy plays a fundamental role in modern society, as it directly influences quality of life and economic productivity [1]. However, continued reliance on fossil fuels, particularly diesel-based generation, has led to environmental concerns and economic vulnerability due to volatile global oil prices. These challenges have encouraged many countries, especially developing and island nations, to accelerate the transition toward renewable and sustainable energy systems [2].

The Oé-Cusse District, illustrated in Figure 1, is part of the Região Administrativa Especial de Oé-Cusse Ambeno (RAEOA), an autonomous region of Timor-Leste established to promote accelerated socioeconomic development and regional integration. As part of national development strategies, RAEOA has been prioritized for infrastructure investment, tourism development, digital services, and industrial activities aimed at stimulating trade, employment, and private sector participation.

National demographic data indicate that Timor-Leste's population has reached approximately 1.3–1.4 million in recent years, with a predominantly young demographic profile, which implies increasing demand for employment, public services, and a reliable electricity supply [3]. Consequently, ensuring a resilient and sustainable electricity system has become a strategic priority for supporting economic development and improving living standards.

Electricity supply in Timor-Leste is currently dominated by diesel-fueled generation due to limited alternative fuel infrastructure and network constraints. This dependence results in high operational costs and fiscal burdens for the national utility, as diesel fuel must be imported. Previous studies indicate that fuel procurement typically represents 80–90% of total generation costs in diesel-dominated systems, while national expenditures for imported fuel in the power sector exceed US$10 million annually. With the levelized cost of electricity from diesel generation reaching approximately US$0.42/kWh and tariffs often maintained below cost-recovery levels through subsidies, continued reliance on diesel generation raises both economic and environmental concerns [4][5].



Figure 1. OECUSSE District of Timor Leste

In addition to high costs, diesel-based generation also contributes to greenhouse gas emissions and increased maintenance requirements, which may affect long-term system reliability.

In response to these challenges, the Government of Timor-Leste has initiated renewable energy programs with support from international partners such as the United Nations Development Programme (UNDP) and the Government of Japan. Initiatives including the Pacific Green Transformation Project have introduced solar energy systems for rural households and public facilities, building upon earlier policies, such as the 2008 Rural Energy Policy that promoted small-scale photovoltaic (PV) installations and mini-hydropower development in several districts [6].

The integration of photovoltaic generation has attracted significant research attention due to its potential to reduce fossil fuel dependence and operating costs. Nevertheless, high PV penetration introduces technical challenges related to voltage regulation, power quality, and system stability [7] with numerous studies reporting that large-scale PV integration may cause voltage fluctuations, harmonic distortion, and hosting capacity limitations in distribution networks [8]. These issues are particularly critical in weak grid environments characterized by low inertia and limited short-circuit capacity, where inverter-based resources may amplify voltage and frequency instability [9]. Additional studies further highlight the nonlinear and system-dependent nature of PV impacts on voltage balance, frequency response, and transient stability, which vary according to network topology, penetration level, and control strategies [10, 11, 12].

Despite these advances, however, most existing studies focus on simplified benchmark systems or transmission-level networks with relatively few investigating real medium-voltage distribution systems in isolated island power grids.

In Timor-Leste, renewable energy projects remain predominantly small-scale or off-grid, and the technical impacts of large grid-connected PV plants on the 20 kV distribution network of the Electricidade de Timor-Leste (EDTL) system in RAEOA have not been comprehensively evaluated. This gap is particularly significant given that the planned integration of a 15 MWp solar PV plant corresponds to approximately 87% of the existing diesel generation capacity, representing an extremely high penetration level for an isolated system.

Therefore, this study investigates the integration of a 15 MWp grid-connected solar photovoltaic power plant into the 20 kV distribution network of the EDTL RAEOA system using steady-state and dynamic simulation approaches. The analysis evaluates both voltage and frequency performance under normal operating conditions and disturbance scenarios in order to assess the technical feasibility of high-penetration PV integration while maintaining system stability and power quality.

The main contribution of this research lies in its comprehensive evaluation of voltage and frequency stability in a real medium-voltage distribution network with very high PV penetration. Unlike studies based on simplified models, this work analyzes an operational 20 kV distribution system and provides quantitative comparisons between pre-integration and post-integration conditions. By simultaneously examining voltage profiles and frequency response characteristics, the study offers a holistic assessment of renewable integration impacts in weak island power systems, providing valuable technical insights for future renewable energy planning in developing and isolated grids.

The novelty of this study lies in its comprehensive stability assessment of high-penetration photovoltaic (PV) integration in a real isolated medium-voltage distribution system. Unlike many previous studies that rely on simplified benchmark networks or analyze voltage and frequency stability separately, this research simultaneously evaluates both voltage and frequency stability in the operational 20 kV distribution network operated by Electricidade de Timor-Leste (EDTL) in the Região Administrativa Especial de Oecusse-Ambeno (RAEOA), Timor-Leste. By analyzing the integration of a 15 MWp grid-connected solar PV plant—representing an exceptionally high penetration level relative to the existing diesel generation capacity—the study provides new insights into the stability challenges and operational behavior of renewable-integrated island power systems.

The 20 KV Diesel Power Network of EDTL in RAEOA, Timor-Leste

Providing reliable electricity remains a major challenge in many developing countries, particularly in remote and isolated regions such as the Região Administrativa Especial de Oecusse-Ambeno (RAEOA) in Timor-Leste. In the absence of an interconnected national grid, electricity supply in RAEOA relies primarily on diesel power plants operated by Electricidade de Timor-Leste (EDTL). Diesel-based generation continues to dominate isolated systems due to its dispatchability, fast start-up capability, and operational reliability, enabling the supply of base load, peak demand, and emergency power in weak grids [13].

Electricity from these diesel plants is distributed through a 20 kV medium-voltage network, widely used in rural areas to balance efficiency, voltage regulation, and investment cost. Such systems include transformers, radial feeders, and protection devices to maintain power quality and reliability [14]. However, heavy reliance on diesel generation creates significant economic and environmental challenges. Fuel import dependency exposes the sector to price volatility and high operating costs while simultaneously increasing greenhouse gas emissions [15]. In many small-island systems, fuel expenditures account for 60–80% of total operating costs, making electricity supply highly sensitive to fuel price fluctuations [16].

These challenges have encouraged renewable energy integration, particularly solar photovoltaic (PV) systems. In tropical regions such as Timor-Leste, solar energy is a locally available resource capable of reducing fuel consumption and emissions. As such, hybrid diesel–PV systems have therefore attracted attention due to their potential to lower operating costs and improve sustainability [17]. However, inverter-based PV integration also introduces technical challenges in weak networks, including voltage regulation issues, frequency instability, and reduced system inertia.

In response, the Government of Timor-Leste, supported by international partners such as the United Nations Development Programme (UNDP), has promoted renewable deployment through policies such as the Rural Energy Policy. These initiatives encourage decentralized solutions, including off-grid, mini-grid, and hybrid systems, to enhance energy security and reduce fuel dependency [18][19]. Within this framework, the planned installation of a 15 MWp grid-connected PV plant in RAEOA represents a significant step toward hybrid diesel, PV operation within the existing 20 kV network.

Previous studies show that high PV penetration can significantly affect the operation of weak or isolated systems, emphasizing the need for load flow, short-circuit, and dynamic stability analyses to evaluate interactions between diesel generators and inverter-based PV resources. Without proper control, high PV penetration may cause voltage rise, power fluctuations, and reduced system inertia. Consequently, modern hybrid systems rely on energy management systems (EMS) and grid-supporting inverters

capable of providing reactive power support, voltage regulation, and frequency response [20].

For RAEOA, transitioning to a hybrid diesel–PV system can improve resilience, reduce fuel dependency, and alleviate fiscal pressure on EDTL while supporting sustainable development. Although diesel generation will remain dominant in the near term, the existing 20 kV infrastructure provides a practical platform for gradual renewable integration, making RAEOA a representative case for isolated power systems in Timor-Leste and similar regions.

System Stability

System stability is a fundamental attribute of power system performance, reflecting the system's ability to maintain a state of operating equilibrium under normal conditions and to regain an acceptable steady-state following a disturbance. Such disturbances may include transient faults, abrupt load variations, or the sudden tripping of generation units. A stable power system must be capable of preserving synchronism among all interconnected machines, sustaining voltage magnitudes within permissible limits, and maintaining system frequency close to its nominal value during both steady-state and dynamic operating conditions. In technical terms, system stability encompasses the dynamic response of generators, network elements, and control systems to disturbances [21][22]. The power system stability classification is shown in Figure 2.

Voltage Stability

Voltage stability is a critical requirement for reliable power system operation, particularly in networks with high penetration of renewable energy sources such as photovoltaic (PV) generation. It refers to the ability of a power system to maintain acceptable voltage levels at all buses under normal operating conditions and following disturbances such as load changes, generator outages, or fluctuations in renewable generation [23][24].

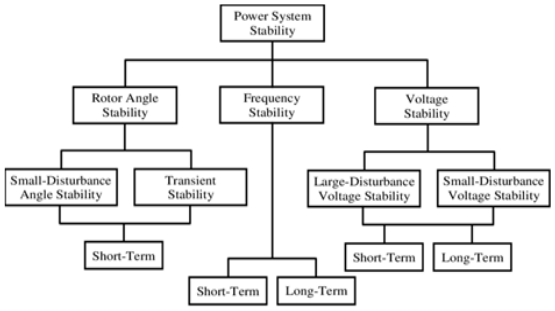

Figure 2. Power system stability classification

Voltage instability generally occurs when the system is unable to supply the reactive power required by the load. This condition is commonly observed in weak transmission or distribution networks, especially at the ends of long feeders where reactive power support is limited. An imbalance between reactive power demand and supply may lead to progressive voltage reduction and eventually voltage collapse, a condition in which bus voltages decline uncontrollably and may result in widespread system outages [25].

The mechanism of voltage instability can be explained using the power transfer relationship in a simple two-bus system. The active and reactive power transferred between buses depend on the bus voltages and the line reactance:

$$P = \frac{V_s V_r}{X} \sin \delta \quad (1)$$

$$Q = \frac{V_r}{X}(V_s \cos(\delta) - V_r) \quad (2)$$

where (P) and (Q) denote active and reactive power, (V_s) and (V_r) represent the sending and receiving end voltages, (X) is the line reactance, and (δ) is the power angle. These relationships indicate that a reduction in receiving-end voltage (V_r) increases reactive power demand, which may exceed the network's reactive power capability.

Rotor Angle Stability

Rotor angle stability refers to the ability of synchronous generators in a power system to maintain synchronism following a disturbance, such that relative rotor angles remain bounded and do not diverge uncontrollably. In isolated and weak power systems such as the RAEOA distribution network, where system inertia is primarily provided by diesel-driven synchronous generators, rotor angle stability becomes a critical dynamic performance criterion, especially under increasing penetration of inverter-based renewable energy sources [26][27].

In synchronous machines, electrical power transfer is inherently linked to the torque (power) angle, denoted by δ, which represents the angular displacement between the rotor magnetic field and the stator rotating magnetic field. Under steady-state operating conditions, the mechanical input power (P_m) supplied by the prime mover is equal to the electrical output power (P_e) delivered to the network, and the rotor rotates at synchronous speed:

$$P_m = P_e \Rightarrow \frac{d^2\delta}{dt^2} = 0 \quad (3)$$

However, when a disturbance occurs, such as a short circuit, sudden load change, or generator tripping, this power balance is

temporarily disrupted. The resulting mismatch between mechanical and electrical power produces an accelerating or decelerating torque on the rotor, causing its angular position to change dynamically. The dynamic behavior of synchronous machines under disturbances is governed by the swing equation, which relates rotor acceleration to the mismatch between mechanical input power and electrical output power,

$$\frac{2H}{\omega_s}\frac{d^2\delta}{dt^2} = P_m - P_e \quad (4)$$

where:
H is the inertia constant of the synchronous generator (s), $\omega_s = 2\pi f$ is the synchronous angular speed (rad/s), δ is the rotor angle (rad), P_m is the mechanical input power (p.u), P_e is the electrical output power (p.u).

The difference $P_a = P_m - P_e$ is commonly referred to as the accelerating power. A positive accelerating power causes rotor acceleration, increasing δ, while a negative accelerating power results in rotor deceleration.

The electrical output power of a synchronous generator connected to a network can be approximated by the power–angle relationship:

$$P_e = P_{\max} \sin\delta \quad (5)$$

where P_{max} is the maximum transmittable electrical power, determined by generator internal voltage, system voltage, and transfer reactance. This nonlinear relationship implies that as δ increases, the electrical power output increases up to a stability limit. If δ exceeds a critical value, the generator may lose synchronism.

In the context of the RAEOA power system, rotor angle stability is influenced by the total available synchronous inertia. The integration of large-scale solar PV generation reduces the loading and dispatch of diesel generators, thereby decreasing the number of online synchronous machines and the effective inertia of the system. Although PV systems do not directly participate in rotor angle dynamics, their displacement of synchronous generation increases the sensitivity of rotor angles to disturbances by amplifying the acceleration term in the swing equation. Therefore, ensuring rotor angle stability in high-PV penetration scenarios requires careful evaluation of system inertia, disturbance severity, and post-fault power recovery [28][29]. This theoretical framework provides the basis for the quantitative rotor angle stability assessment conducted in the subsequent analysis section, where pre- and post-PV integration scenarios are evaluated under realistic disturbance conditions.

Frequency Stability

Frequency stability is a fundamental aspect of power system performance, defined as the ability to maintain stable frequency following disturbances that create imbalances between generation and load. While voltage stability is governed by reactive power, frequency stability depends on the balance of active power. In conventional systems, frequency regulation is supported by the rotational inertia of synchronous generators, which store kinetic energy and buffer sudden imbalances. Following disturbances such as generator outages or load changes, the system response is determined by inertia and control mechanisms such as governors and automatic generation control (AGC) [30].

The increasing penetration of inverter-based renewable energy sources (IBRES), such as solar PV and wind, has significantly reduced system inertia [31][32]. Unlike synchronous machines, inverter-based resources do not inherently provide kinetic energy, leading to faster frequency deviations and higher Rate of Change of Frequency (RoCoF) after disturbances [33]. Since RoCoF is inversely proportional to system inertia, lower inertia results in more rapid frequency variations [34].

This issue is particularly critical in weak or isolated grids such as the 20 kV network operated by Electricidade de Timor-Leste (EDTL) in the Região Administrativa Especial de Oecusse-Ambeno (RAEOA), Timor-Leste, where renewable penetration can be high. Sudden reductions in solar output, due to irradiance fluctuations or inverter tripping, may produce large RoCoF values, increasing the risk of under-frequency load shedding (UFLS) and system instability [35].

The RoCoF quantifies the initial dynamic response of the system frequency immediately following a disturbance. It is defined as the time derivative of system frequency and can be expressed as:

$$\mathrm{RoCoF} = \frac{df}{dt} \quad (\mathrm{Hz}/s) \quad (6)$$

The classical swing equation (per machine or aggregated) in mechanical/angular form is,

$$\frac{2H}{\omega_s}\frac{d\omega}{dt} = P_m - P_e \quad (\mathrm{p.u}) \quad (7)$$

$$\frac{d\omega}{dt} = 2\pi\frac{df}{dt} \quad (8)$$

Substitution to (1),

$$\frac{df}{dt} = \frac{f_0}{2H}(P_m - P_e) \quad (9)$$

Then (1) becomes,

$$\mathrm{RoCoF} = \frac{df}{dt} = \frac{f_0}{2H}\Delta P \quad (10)$$

where, $\Delta P = P_m - P_e$

With a system in MVA base S_{base} and a power imbalance ΔP, then,

$$\mathrm{RoCoF} = \frac{df}{dt} = \frac{f_0}{2H_{sys}S_{base}}\Delta P \quad (11)$$

where, f_0 is the nominal frequency; ω is the rotor angle speed (rad/s); $\omega_s = 2\pi f$ is the synchronous angular speed; H_{sys} is the aggregated system inertia constant, (*s*); S_{base} is the system base apparent power (MVA); ΔP is the active power imbalance (MW) following the disturbance; P_m is the mechanical input (pu); and P_e is the electrical output (pu).

If the inverter control provides an active power contribution of the form, then

$$P_{syn}(t) = -K\frac{df}{dt} \quad (12)$$

with K in units MW·s/Hz (a proportional constant representing how much power the converter supplies per unit RoCoF). This control action is equivalent to adding an inertia term H_{INV} to the aggregated inertia such that:

$$H_{inv} = \frac{Kf_0}{2S_{base}} \quad (13)$$

Therefore, the effective inertia used in (11) becomes,

$$H_{eff} = H_{sys} + H_{inv} \quad (14)$$

and,

$$H_{sys} = \frac{\sum_{i=1}^{N} H_i S_i}{S_{base}} \quad (15)$$

This formulation is useful for estimating how much synthetic inertia (or fast BESS injection characterized by K) is required to limit RoCoF to acceptable levels in RAEOA.

In the 20-kV of EDTL RAEOA network in Timor-Leste, the challenge becomes even more critical because such systems may be relatively isolated and lack large synchronous generation reserves. The loss of a diesel generator or cloud cover affecting PV output can induce frequency fluctuations if not properly managed.

METHOD

This study evaluates the technical impacts of integrating a 15 MWp grid-connected solar photovoltaic (PV) power plant into the existing 20 kV distribution network operated by EDTL in RAEOA, Timor-Leste. The analysis combines steady-state and dynamic simulations to assess voltage and frequency stability under different operating conditions.

Step 1: A detailed electrical model of the RAEOA 20 kV system is developed using network data, including generator ratings, transformer parameters, feeder impedances, and load characteristics obtained from technical reports and operational records. Typical daily load profiles are applied to represent peak and off-peak conditions. Where detailed manufacturer data are unavailable, standard synchronous generator parameters are adopted based on IEEE recommendations. The baseline configuration represents the existing diesel-based generation system (PLTD) supplying the network.

Step 2: A PV integration scenario is then introduced by connecting a 15 MWp solar power plant (PLTS) to the 20 kV network. Two operating scenarios are considered: (1) pre-integration, representing the diesel-only system, and (2) post-integration, representing the hybrid diesel–PV configuration.

Step 3: Steady-state load flow analysis is conducted to evaluate bus voltage profiles and power flow distribution for both scenarios. Voltage stability is assessed using the Fast Voltage Stability Index (FVSI) to identify buses that are most vulnerable to instability.

Step 4: Dynamic simulations are performed to analyze system frequency response under disturbance conditions. The analysis includes evaluation of equivalent system inertia (H_eq) and the Rate of Change of Frequency (RoCoF) following generation or load disturbances, providing indicators of frequency stability performance.

Step 5: Results from pre- and post-integration scenarios are compared to quantify the impact of PV penetration on voltage profiles, stability margins, and frequency dynamics of the RAEOA distribution network.

System Description and Modeling

The test system considered in this study is the medium-voltage 20 kV distribution network operated by EDTL in the RAEOA, Timor-Leste. EDTL is responsible for electricity generation, transmission, distribution, and retail services nationwide. The single-line diagram of the RAEOA system is shown in Figure 3.

The system is modeled using a positive-sequence representation of the 20 kV network.

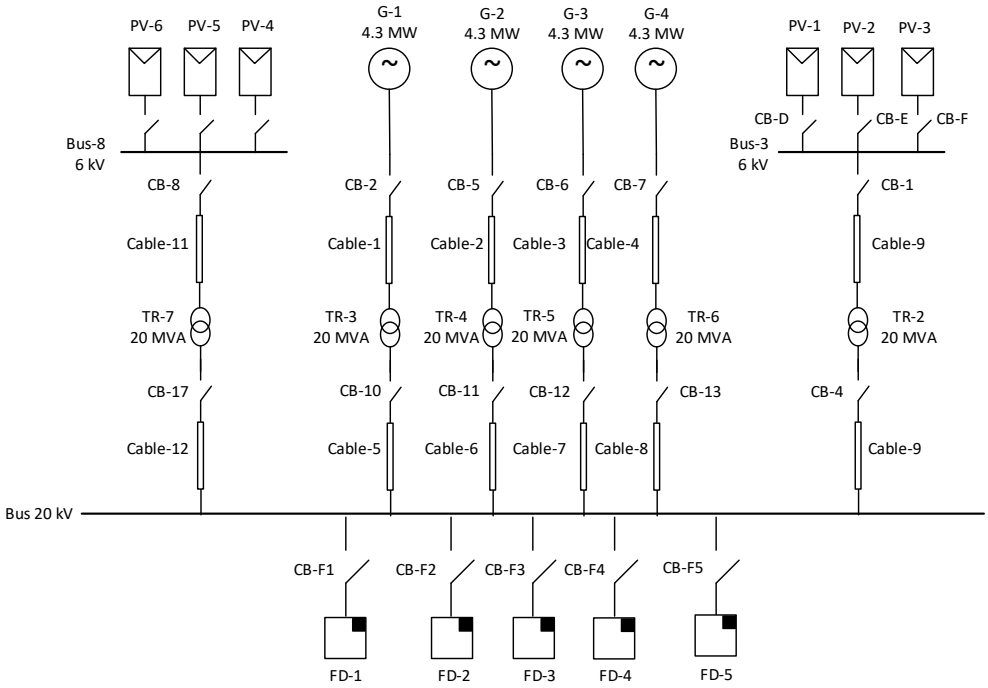

Figure 3. The single-line diagram of the EDTL RAEOA system

Diesel generators are represented by sixth-order synchronous machine models equipped with automatic voltage regulators (AVR) and governor systems to capture dynamic behavior.

Loads are modeled as a combination of constant power and constant impedance components, while the network includes feeders, transformers, and interconnecting buses.

A 15 MWp grid-connected photovoltaic (PV) power plant is integrated into the model to evaluate its impact on system performance. The modeling incorporates key parameters including: (1) PV inverter characteristics (control mode, reactive power capability, and grid-support functions), (2) load characteristics (peak demand, load factor, and power factor), and (3) network parameters (line impedances and transformer specifications). Detailed parameter values are provided in Table 1, Table 2 and Table 3.

Studied Scenarios and Disturbances

Several operating scenarios are evaluated to assess the stability performance of the RAEOA power system under different conditions:

1. Base case scenario: existing diesel-based system without PV integration.
2. PV integration scenario: hybrid diesel–PV system with a 15 MWp grid-connected solar power plant.
3. Load disturbance scenario: sudden load increase or load shedding events.
4. Generation disturbance scenario: diesel generator tripping or short-circuit faults within the network.

These scenarios allow evaluation of both normal operating conditions and dynamic disturbances that may affect system stability.

Table 1. PV Inverter Specifications (15 MWp On-Grid)

Parameter	Value / Description
PV installed capacity	15 MWp
Inverter rated AC capacity	12 - 15 MW (utility scaled)
DC/AC ratio	1.1 - 1.25
Inverter type	Grid following (PLL-based)
Control mode	Active power control (P-V), Reactive power control (Q-V)
Reactive power capability	± 0.33 p.u (based on inverter rating)
Power factor range	0.95 (lagging) – 0.95 (leading)
Voltage support	Enable (Q-V droop)
Frequency support	No synthetic inertia (baseline case)
Grid code compliance	IEEE 1547 / IEC 61727 (assumed)

Table 2. Load Characteristics of RAEOA 20-kV Distribution Network

Parameter	Value
PV installed capacity	15 MWp
Peak load demand	12 – 14 MW
Minimum load	5 – 6 MW
Load factor	0.60 – 0.65
Load model	Constant P-Q
Average power factor	0.85 (lagging)
Load distribution	Radial, spread across 20-kV buses
Daily load profile	Typical island grid (evening peak)

Table 3. Network and Equipment Parameters

Component	Specification
PV installed capacity	15 MWp
Nominal voltage	20 kV
Network topology	Radial distribution feeder
Line resistance (R)	0.3 – 0.6 Ω/km
Line reactance (X)	0.4 – 0.8 Ω/km
Transformer ratings	20/0.4 kV, 250 – 1000 kVA
Transformer impedance	4 – 6 %
Frequency	50 Hz
Grid type	Weak / isolated system

Stability Analysis Methods

Both steady-state and dynamic stability analyses are performed. Steady-state load flow analysis is used to evaluate bus voltage profiles and power flow distribution across the network. Voltage stability is assessed using the Fast Voltage Stability Index (FVSI) to identify buses that are most vulnerable to voltage instability [36].

Dynamic simulations are conducted by solving the swing equation of synchronous generators under various disturbance conditions and key dynamic variables such as rotor angle deviation, system frequency response, and bus voltage variations are monitored to evaluate system stability. The analysis also considers equivalent system inertia and the Rate of Change of Frequency (RoCoF) as indicators of frequency stability performance.

Performance Indices and Evaluation Criteria

The performance of the system is evaluated using several quantitative indicators: (1) maximum rotor angle deviation, (2) frequency nadir and Rate of Change of Frequency (RoCoF), (3) bus voltage deviation and voltage recovery characteristics, and (4) Fast Voltage Stability Index (FVSI). The flow-chart of the system study is indicated in Figure 4. The system is considered stable if all variables remain within acceptable operational limits defined by international power system operational standards.

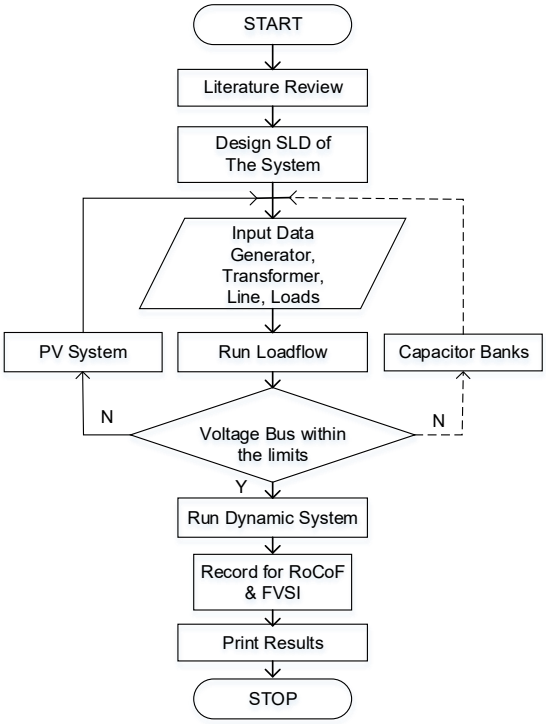

Figure 4. Flowchart of the system study

Simulation Tools and Validation Approach

All simulations are conducted using industry-standard power system analysis software. Model validation is performed by comparing steady-state results with actual operating data from the RAEOA system to ensure consistency and reliability.

Simulation Results

As explained in previous section, there are four scenarios applied to analyze the system performance, a base-case (no PV), moderate PV integration, high penetration PV, and disturbance of release the PV system. The voltage profile with and without PV integration is shown in Figure 5.

Based on the existing system of EDTL RAEOA without integration of PLTS as a base case, the system consists of one main bus of 20-kV and five feeders with 120 buses. The voltage profiles of the buses in the feeders without PLTS integration are shown in Figures 5, 6, 7, 8, and 9, respectively. It can be seen from the simulation results that the worst and the highest voltage profiles of the system are 92.36% at Bus 151 and 100% at Bus 9, respectively, before the integration of PLTS.

When the PLTS is integrated into the system, the voltage profiles of each bus are increased, and the voltage at Bus 151 increased to 95.1% or increased 2.74% while the highest voltage of 100% is at Bus 3, Bus 8, and Bus 9. Overall, the bus voltages are increased above 95% and this indicates the impact of PLTS integration to improve the voltage profiles.

From Figure 5, it can be seen that the bus voltage profiles at feeder 1 are still within acceptable limits with and without PLTS integration.

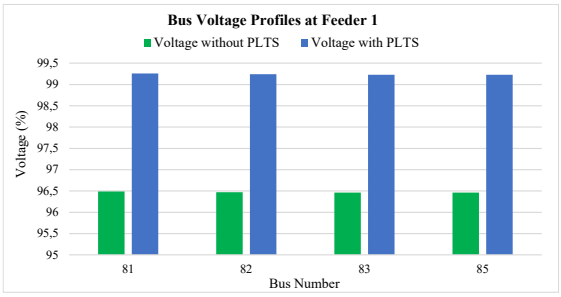

Figure 5. Bus voltage profiles at Feeder 1 with and without PLTS integration

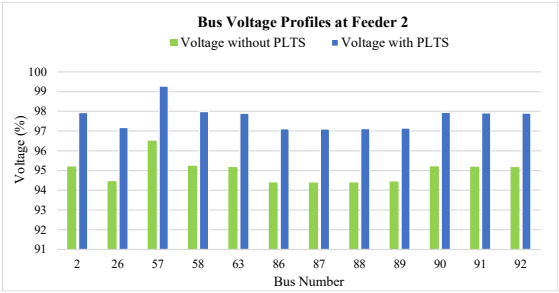

Figure 6. Bus voltage profiles at Feeder 2 with and without PLTS integration

As shown in Figure 6, the voltage profiles at feeder 2 before and after PLTS integration. Three buses experienced undervoltage levels, such as Bus 26, Bus 86, Bus 87, Bus 88, and Bus 89, before the PLTS integration and were increased to acceptable limits after integration of PLTS. The bus voltage profiles at feeder 3 are shown in Figure 7. A few buses indicated undervoltage levels before PLTS integration and increased to acceptable levels with the PLTS integration. It can also be seen from Figures 7, 8, and 9 that the bus voltage profiles at feeders 3, 4, and 5 are increased significantly above 97%. This condition shows that the impact of integration of PLTS contributes to voltage stability of the whole system, reduces distribution losses, and increases the system efficiency.

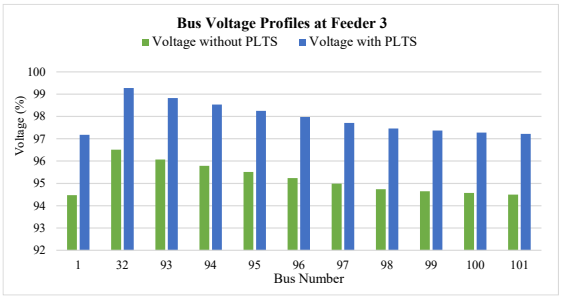

Figure 7. Bus voltage profiles at Feeder 3 with and without PLTS integration

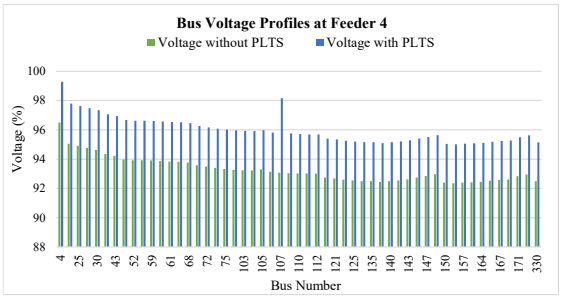

Figure 8. Bus voltage profiles at Feeder 4 with and without PLTS integration

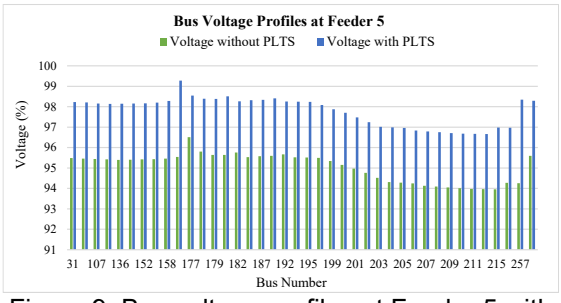

Figure 9. Bus voltage profiles at Feeder 5 with and without PLTS integration

Investigation into the frequency impact of the system with and without integration of the PV in moderate, high penetration, and disturbance event is described below.

When the PV of 7.5 MWp and 15 MWp integrated to the main grid, the system frequency experienced oscillation with decline of the frequency value, as shown in Figure 10 and Figure 11, respectively.

When the PV system was released, the frequency experienced large oscillation compared to the previous event, as shown in Figure 12.

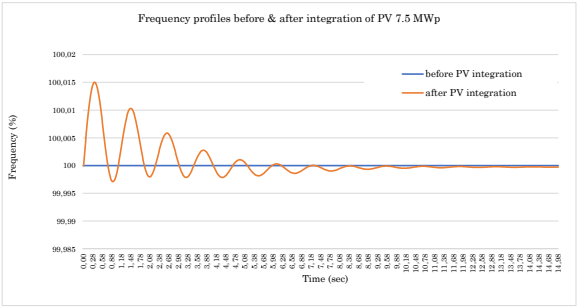

Figure 10. Frequency profiles with and without PV integration of 7.5 MWp

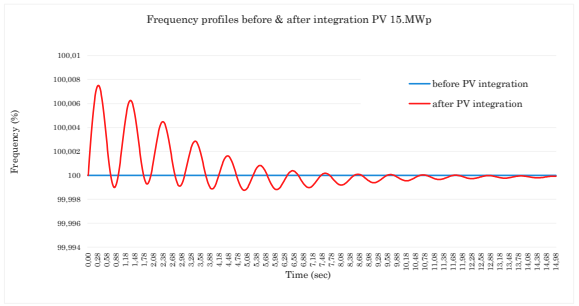

Figure 11. Frequency profiles with and without PV integration of 15 MWp

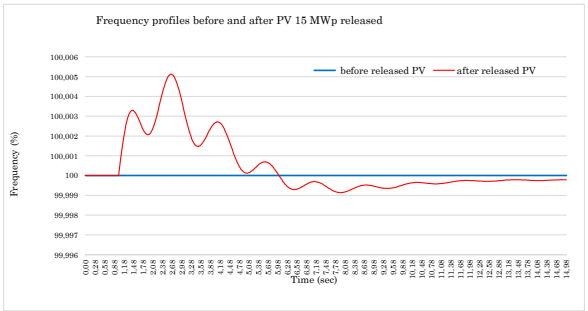

Figure 12. Frequency profiles when releasing the PV of 15 MWp from the grid

RESULTS AND DISCUSSION

A Steady-state Voltage Profile Analysis

Common System Parameters of RAEOA Data

Nominal frequency, f_0 = 50 Hz.

Diesel installed capacity, P_{Dies} = 17.2 MW

System Power Base, S_{base} = 17.2 MVA

Diesel Inertia constant, H = 4.5 s

Representative disturbance for RoCoF, ΔP = 1 MW

$$\text{RoCoF} = \frac{f_0}{2H_{eq}} \times \frac{\Delta P}{S_{base}}$$

The Voltage Stability Index Formulation (FVSI),

$$FVSI = \frac{4Z_{ij}^2 Q_j}{V_i^2 X_{ij}};\ Z_{ij} = \sqrt{R_{ij}^2 + X_{ij}^2}$$

1. Base-Case: ***Operation without Renewable Penetration*** (***Diesel-Only***)

Equivalent Inertia,

$$\text{RoCoF} = \frac{f_0}{2H_{eq}} \times \frac{\Delta P}{S_{base}} = 0.32\ \text{Hz}/s$$

Frequency deviation (initial),

$$\Delta f(t) \approx \text{RoCoF} \times t$$

At t = 0.5 s, $\Delta f \approx 0.32 \times 0.5 \approx 0.16$ Hz

This condition indicates strong inertia response, slow frequency decline, and is well within operation limits.

2. Case-1: ***Operation with Renewable Penetration of PV = 7.5 MWp***

PV penetration level:

$$PV_{pen} \approx \frac{7.5}{17.2} \times 100\% \approx 43.6\%$$

Equivalent Inertia

At moderate PV penetration, most diesel units remain online, H_{eq} = 3.8 s.

$$\text{RoCoF} = \frac{50}{2 \times 3.8} \times \frac{1}{17.2} = 0.38\ \text{Hz}/s$$

Frequency deviation at 0.5 s,

$$\Delta f(t) \approx \text{RoCoF} \times t \approx 0.38 \times 0.5 \approx 0.19\ \text{Hz}/s$$

This interpretation shows that the voltage profile improves locally near PV buses, frequency stability remains strong, and diesel inertia is still dominant, with the system in a safe operation region.

The Voltage Stability Index

Reactive Power Condition

PV operates near unity PF with inverter VAR support, Q_j = 3.0 MVAr

FVSI calculation,

$$FVSI = \frac{4(0.38)^2(3.0)}{(1.0)^2(0.35)} = \frac{1.73}{0.35} \approx 0.40$$

Voltage profile

$$V_j \approx 0.98 - 1.01 \text{ p.u}$$

This condition indicates a strong voltage margin, that PV improves local voltage support, and the system is in stable operation.

3. Case-2: ***PV Increased to 15 MWp***

PV Penetration Level:

$$PV_{pen} \approx \frac{15}{17.2} \times 100\% \approx 87\%$$

Reduced Equivalent Inertia

Assuming partial diesel unloading, H_{eq} = 2.8 s,

$$\text{RoCoF} = \frac{50}{2 \times 2.8} \times \frac{1}{17.2} = 0.52 \text{ Hz} / s$$

Frequency deviation at t = 0.5 s,

$$\Delta f(t) \approx \text{RoCoF} \times t \approx 0.52 \times 0.5 \approx 0.26 \text{ Hz} / s$$

This indicates that significant voltage support from PV results in faster frequency decline, and reduced stability margin. The system is acceptable but critical.

The Voltage Stability Index

Reactive Power Condition

Increased inverter VAR exchange and reverse power flow, Q_j = 4.5 MVAR

FVSI calculation,

$$FVSI = \frac{4(0.38)^2(4.4)}{(1.0)^2(0.35)} = \frac{2.60}{0.35} \approx 0.74$$

Voltage profile

$$V_j \approx 1.02 - 1.05 \text{ p.u}$$

This condition indicates voltage rise begins to dominate with reduced stability margin and the system in marginal condition but acceptable.

4. Case-3: ***Release / Loss of 15 MWp PV***

This represents cloud transient, inverter trip, or PV plant disconnection.

Sudden Power Imbalance, ΔP = -15 MWp

Equivalent Inertia

Diesel units remain online but initially overloaded, H_{eq} = 2.8 s

$$\text{RoCoF} = \frac{50}{2 \times 2.8} \times \frac{15}{17.2} = 7.79 \text{ Hz} / s$$

Frequency Drop (0.2 s),

$$\Delta f \approx 7.79 \times 0.2 \approx 1.56 \text{ Hz} / s$$

$$f \approx 48.44 \text{ Hz}$$

This condition indicates that very high RoCoF has high risk of under-frequency protection, and diesel governors alone are insufficient. This is unacceptable without fast mitigation.

The Voltage Stability Index

Reactive Power Condition

Loss of inverter VAR support → diesel absorbs reactive demand, Q_j = 7.0 MVAR

FVSI calculation,

$$FVSI = \frac{4(0.38)^2(7.0)}{(1.0)^2(0.35)} = \frac{4.04}{0.35} \approx 0.91$$

Voltage profile: $V_j \approx 0.92 - 0.95 \text{ p.u}$

This condition indicates sharp voltage drop, near-collapse condition, and high voltage instability risk. The comparative summary results of the scenario of the RDTL RAEOA system are shown in Table 4 and Table 5.

Previous studies on PV integration have largely focused on large interconnected transmission systems. For example, studies on the 150 kV Bali system [11] and the 500 kV Java–Bali system with the integration of the Cirata Floating PV plant mainly evaluated the impacts of PV penetration on frequency response, voltage stability, and system inertia [12]. The results showed that increasing inverter-based generation tends to reduce system inertia and affect frequency stability, although the overall system performance remained within acceptable limits due to the strong interconnection and large generation reserves available in these networks.

In contrast, the EDTL RAEOA system represents a weak and isolated 20 kV distribution network with a PV penetration level approaching 87% of the installed diesel generation capacity. Under such conditions, the impacts of PV integration on both voltage and frequency stability become more pronounced than in large interconnected systems. While previous renewable-dominated system studies have highlighted the challenges of low inertia, increased RoCoF, and voltage regulation in inverter-based grids, they generally focus on conceptual analyses or large-scale systems rather than real medium-voltage island networks.

Therefore, the present study extends existing research by simultaneously evaluating FVSI-based voltage stability and inertia- and RoCoF-based frequency stability in a real isolated distribution system, providing practical insights into the operational impacts of high PV penetration in diesel-dominated island grids.

Table 4. Rate of Change of Frequency (RoCoF) Summary

Case	PV (MWp)	PV Penetration (%)	H_{eq} (s)	RoCoF (Hz/s)	Frequency Impact
Base case (diesel only)	0	0	4.0	0.78	**Stable** (well within protection limits)
Moderate PV integration	7.5	43.6	2.26	1.38	**Stable-Marginal** (acceptable but reduced inertia)
High PV integration					
PV tri (sudden loss)	15.0	87.72	0.51	2.15	**Critical** (high RoCoF, protection risk)
	-15.0	-87.72	→ 0	> 3.0	**Unstable** (likely frequency collapse or load shedding)

Table 5. Voltage Stability Index (FVSI) Summary

Case	PV (MWp)	PV Penetration (%)	Voltage Range (p.u)	FVSI	System Impact
Base case (diesel only)	0	0	0.92 - 0.95	0.65	Weak-Stable
Moderate PV integration	7.5	43.6	0.98 – 1.01	0.49	Stable
High PV integration					
PV trip (sudden loss)	15.0	87.72	1.01 – 1.05	0.30	Strong
	-15.0	-87.72	0.88 – 0.91	0.88	Near Critical

CONCLUSION

This study evaluated the steady-state and dynamic performance of the EDTL RAEOA 20 kV distribution network following the integration of a 15 MWp grid-connected photovoltaic (PV) system using detailed ETAP simulations. The results demonstrate a significant improvement in voltage profile, where the minimum bus voltage increased from 0.9236 p.u. (Bus 151, pre-integration) to 0.9699 p.u. (Bus 212, post-integration). Dynamic frequency analysis indicates a maximum frequency overshoot of 100.015% (50.0075 Hz) with a settling time of approximately 3–4 seconds, while the calculated Rate of Change of Frequency (RoCoF) remains low at ≈ 0.038 Hz/s, confirming stable dynamic behavior under the studied disturbance. From a standards compliance perspective, all post-integration operating conditions satisfy commonly adopted distribution grid requirements.

Bus voltages remain within the ±5% statutory limits (0.95–1.05 p.u.), and frequency deviations are well below under- and over-frequency protection thresholds (49–51 Hz). Furthermore, the observed RoCoF values are substantially lower than typical protection relay settings for small or isolated systems (0.5–1.0 Hz/s), indicating that the PV integration does not compromise system protection coordination or operational security. Based on these findings, several operational recommendations can be proposed for EDTL RAEOA.

First, continued deployment of utility-scale PV systems up to comparable penetration levels can be accommodated without requiring major reinforcement of the existing 20 kV network.

Second, the implementation of coordinated Volt–VAR control at PV inverters is recommended to further enhance voltage regulation during high irradiance and low load conditions.

Finally, periodic review of frequency protection settings is advised to ensure compatibility with increasing inverter-based resource penetration while maintaining adequate system security.

Despite these positive outcomes, this study has several limitations. The analysis is based on a deterministic simulation model and does not explicitly account for short-term PV output variability caused by fast-moving cloud events. In addition, load models are assumed to be static, and detailed inverter control dynamics, such as synthetic inertia or fast frequency response, are not fully represented. Consequently, the results primarily reflect average operating conditions rather than extreme or stochastic scenarios.

Future research should therefore focus on (1) incorporating high-resolution irradiance and load variability data to assess voltage and frequency performance under rapid PV fluctuations, and (2) evaluating the impact of advanced inverter-based control strategies, including synthetic inertia and adaptive droop control, on frequency stability and protection coordination in the EDTL RAEOA network.

ACKNOWLEDGMENT

The author(s) would like to thank the Directorate of Research and Community Service, Ministry of Higher Education, Science, and Technology, Government of the Republic of Indonesia, in supporting this research under the contract No. 128/C3/DT.05.00/PL/2025 during the 2025 fiscal year.

REFERENCES

[1] IEA, *World Energy Outlook 2025, IEA Paris*. https://www.iea.org/ reports/world-energy-outlook-2025. License: CC BY 4.0 (report).

[2] Intergovernmental Panel on Climate Change (IPCC), *Climate Change 2021: The Physical*

Science Basis, Cambridge University Press, Cambridge, U.K., 2021.
[3] Timor-Leste - Statistics & Facts, 2025. https://www.statista.com/topics/5059/timor-leste.
[4] World Bank, Timor Leste Economic Report: Ways to Harvest Prosperity, Washington DC, 2023.https://www.adb.org/sites/default/files/linked-documents/51063-001-sd-03.pdf?
[5] Asian Clean Energy Forum, https:// asiacleanenergyforum.adb.org/wp-content/uploads/2023/06/Euna-Shim.pdf?
[6] Government of Japan and United Nations Development Programme, *Partnership Initiatives for Renewable Energy and Sustainable Development in the Pacific Region*, 2022.
[7] J. C. León Gómez, S. E. De León Aldaco, J. Aguayo Alquicira, "A Review of Hybrid Renewable Energy Systems: Architectures, Battery Systems, and Optimization Techniques, *Eng*, vol. 4, no. 2, pp. 1446-1467, 2023, doi: 10.3390/eng4020084.
[8] M. Li, X. Zhang, X. Fu, H. Geng, and W. Zhao, "Stability Studies on PV Grid-connected Inverters under Weak Grid: A Review," *Chinese Journal of Electrical Engineering*, vol. 10, no. 4, pp. 1-18, 2024. doi: 10.23919/CJEE.2024.000081.
[9] J. Valdez, E. García, A. Águila, and D. Carrión, "Quasi-Dynamic Evaluation of High Solar PV Penetration Effects on Voltage Stability and Power Quality in Unbalanced Distribution Networks," *Energies,* vol. 18, no. 21, pp. 1-16, 2025, doi: 10.3390/en18215809.
[10] R. A. Ufa, Y. Y. Malkova, V. E. Rudnik, M. V. Andreev, V. A. Borisov, "A review on distributed generation impacts on electric power system," *International Journal of Hydrogen Energy*, vol. 47, no. 47, pp. 20347-20361, 2022, doi: 10.1016/ j.ijhydene.2022.04.142.
[11] V. Davis, A. Lomi, I. B. Sulistiawati, "Analisa Kestabilan Frekuensi Akibat Integrasi PLTS 100 MW Pada Sistem Tenaga Listrik 150 kV, A Case Study on the Impact of Large-Scale Solar PV Penetration on Grid Frequency Stability", *Jurnal Sinarfe7*, vol. 7, no. 1, pp. 314-323, 2025.
[12] Y. W. Gianto, A. U. Krismanto, and W. P. Muljanto, "Analysis of The Impact of Cirata Floating PV Power Plant Integration on Frequency Stability In The 500 KV Java-Bali", *Jurnal FORTEI-JERRI*, vol. 6, no. 2, pp. 95-1005, 2025
[13] E. F. Fuchs and M. A.S. Masoum, "*Power Quality in Power Systems, Electrical Machines, and Power-Electronic Drives*", 3rd Ed, Elsevier, 2023, doi: 10.1016/C2018-0-02457-3.
[14] X. Liu, D. Yang, A. Donkers, B. de Vries, "Building sustainable urban energy systems: The role of linked data in photovoltaic generation estimation at neighbourhood level", *Applied Energy*, vol. 378, Part A, 124749, 2025, doi: 10.1016/ j.apenergy.2024.124749.
[15] A. G. M. B. Mustayen, M.G. Rasul, X. Wang, M. Negnevitsky, J. M. Hamilton, "Remote areas and islands power generation: A review on diesel engine performance and emission improvement techniques", *Energy Conversion and Management*, vol. 260, 115614, 2022, doi: 10.1016/j.enconman. 2022.115614.
[16] S. E. Nwachukwu, K. A. Folly, K. O. Awodele, S. O. Omogoye and K. K. Adeyemo, "Hybrid Renewable Energy Optimization Using HOMER Pro: A Systematic Literature Review and Future Research Agenda for Emerging Economies," *IEEE Access*, vol. 14, pp. 10695-10718, 2026, doi: 10.1109/ ACCESS. 2026. 3654991.
[17] A. P. Heynen, T. J. MacGinley, L. E. Aguilar, "Electrification in post-conflict Timor-Leste: Opportunities for energy services to enhance rural agricultural development", *Energy Research & Social Science*, vol. 110, 103433, 2024, doi: 10.1016/j.erss.2024. 103433.
[18] B. Akbas, A. S. Kocaman, D. Nock, P. A. Trotter, "Rural electrification: An overview of optimization methods", *Renewable and Sustainable Energy Reviews*, vol. 156, 2022, doi: 10.1016/ j.rser.2021.111935.
[19] A. Lomi, M. Rumbayan, Y. Nakanishi, K. Iwamura, N. R. Estoperez, U. Lewlomphaisarl, E. Yandri, M. Zahoor, and I. Zekker, "Model design of an architectural grid-connected photovoltaic system", *Proceedings of the Estonian Academy of Sciences*, vol. 71, no. 4, pp. 326–335, 2021, doi: 10.3176/proc.2022.4.03.
[20] T. Falope, L. Lao, D. Hanak, D. Huo, "Hybrid energy system integration and management for solar energy: A review," *Energy Conversion and Management: X*, vol. 21, 100527, pp. 1-23, 2024, doi: 10.1016/j.ecmx.2024.100527.
[21] P. S. Kundur, and O. P. Malik, "*Power System Stability and Control*," 2nd Edition, McGraw Hill Professional, 2022.
[22] N. Hatziargyriou, J. Milanović, C. Rahmann, V. Ajjarapu, C. Cañizares, I. Erlich et al., "Definition and Classification of Power

System Stability – Revisited & Extended." *IEEE Transactions on Power Systems*, vol. 36, no. 4, pp. 3271-3281, 2021, doi: 10.1109/TPWRS.2020.3041774.

[23] A. U. Krismanto, H. A. Khairullah, I. B. Sulistiawati, A. Lomi, D. Sarkar, "Probabilistic Static Voltage Stability of Power System with Integration of PV Generators using Monte Carlo Simulation" *Pakistan Academy of Sciences*, pp. 1-12, 2021, doi: 10.53560/ PPASA(58-sp1)735.

[24] J. Duncan Glover, T. J. Overbye, A. B. Birchfield, M. S. Sarma, "Power Systems Analysis and Design", *7th Ed, Cengange*, 2022.

[25] M. I. Saleem, S. Saha, "Assessment of frequency stability and required inertial support for power grids with high penetration of renewable energy sources", Electric Power Systems Research, vol. 229, 110184, 2024, doi: 10.1016/j.epsr.2024.110184.

[26] T. Cao, Z. Ye, Q. Wu, X. Wan, J. Wang, and D. Li, "A Review of Adaptive Control Methods for Grid-Connected PV Inverters in Complex Distribution Systems", *Energies*, vol. 18, no. 3, 473, 2025, doi: 10.3390/en18030473.

[27] K. Yan, G. Li, R. Zhang, Y. Xu, T. Jiang and X. Li, "Frequency Control and Optimal Operation of Low-Inertia Power Systems with HVDC and Renewable Energy: A Review," in *IEEE Transactions on Power Systems*, vol. 39, no. 2, pp. 4279-4295, 2024, doi: 10.1109/ TPWRS.2023.3288086.

[28] P. González-Inostroza, C. Rahmann, R. Álvarez, J. Haas, W. Nowak, and C. Rehtanz, "The Role of Fast Frequency Response of Energy Storage Systems and Renewables for Ensuring Frequency Stability in Future Low-Inertia Power Systems", *Sustainability,* vol. 13, no. 10, 5656, pp. 1-16, 2021, doi: 10.3390/su13105656.

[29] L. Lavanya and K. S. Swarup, "Inertia monitoring in power systems: Critical features, challenges, and framework", *Renewable and Sustainable Energy Reviews*, vol. 190, Part A, 114076, 2024, doi: 10.1016/j.rser. 2023.114076.

[30] R. Bernal and F. Milano, "Complex Frequency-Based Control for Inverter-Based Resources," *Journal of Modern Power Systems and Clean Energy*, vol. 13, no. 5, pp. 1630-1641, 2025, doi: 10.35833/MPCE. 2024.000907.

[31] Y. Gu and T. C. Green, "Power System Stability with a High Penetration of Inverter-Based Resources," in *Proceedings of the IEEE*, vol. 111, no. 7, pp. 832-853, 2023, doi: 10.1109/JPROC.2022.3179826.

[32] X. Deng, R. Mo, P. Wang, J. Chen, D. Nan, and M. Liu, "Review of RoCoF Estimation Techniques for Low-Inertia Power Systems" *Energies,* vol. 16, no. 9, 3708, pp. 1-19, 2023, doi: 10.3390/ en16093708.

[33] M. -Y. Lee and C. -W. Liu, "Adaptive RoCoF Reference-Based Fast Frequency Response with Reduced BESS Operating Costs," in *IEEE Transactions on Industry Applications*, vol. 61, no. 5, pp. 7803-7811, 2025, doi: 10.1109/TIA.2025.3559039.

[34] M. Sun, G. Liu, M. Popov, V. Terzija and S. Azizi, "Underfrequency Load Shedding Using Locally Estimated RoCoF of the Center of Inertia," in *IEEE Transactions on Power Systems*, vol. 36, no. 5, pp. 4212-4222, Sept. 2021, doi: 10.1109/TPWRS.2021.3061914.

[35] F. P.M. Kreuwel, W. H. Knap, L. R. Visser, W. G.J.H.M. van Sark, J. Vilà-Guerau de Arellano, C. C. van Heerwaarden, "Analysis of high frequency photovoltaic solar energy fluctuations, Solar Energy, vol. 206, pp. 381-389, 2020, doi: 10.1016/j.solener.2020.05. 093.

[36] I. Musirin, and T. K. Abdul Rahman, "On-line voltage stability based contingency ranking using fast voltage stability index (FVSI)", *IEEE/PES Transmission and Distribution Conference and Exhibition*, vol. 2, pp.1118-1123, 2022, doi: 10.1109/ TDC. 2002.1177634.