BAB VI

PERANCANGAN ALAT UTAMA

Nama Alat : Absorber
Kode : D-120
Fungsi : Untuk menyerap impuritis gas Etil Alkohol (C_2H_5OH) dan Asam Klorida (HCl) menggunakan absorben air (H_2O)
Jumlah : 1 buah
Type : Packed Colummn

Kondisi Operasi :

- Tekanan operasi : 1 atm = 14,696 psia = 0 psig
- Temperatur : 60 °C = 333,15 K = 599,67 R
- Rate feed masuk : 8482,4205 kg/jam
  : 18700,3442 lb/jam
  : 5,1945 lb/detik
- waktu tinggal : 4 menit = 0,0667 jam = 240 detik
- Fase : gas - liquid

Direncanakan :

- Bahan konstruksi : HAS SA-240 Grade M type 316
  f = 17100 (Pada suhu 599,67 F Brownell,1959 App D-4, hal 342)
- Jenis pengelasan : Double welded butt joint
  E = 0,8 (Brownell,1959. tabel 13-2)
- Faktor korosi : 1/16 = 0,0625 in
- Bahan masuk : 8482,4205 kg/jam
  : 18703,7372 lb/jam

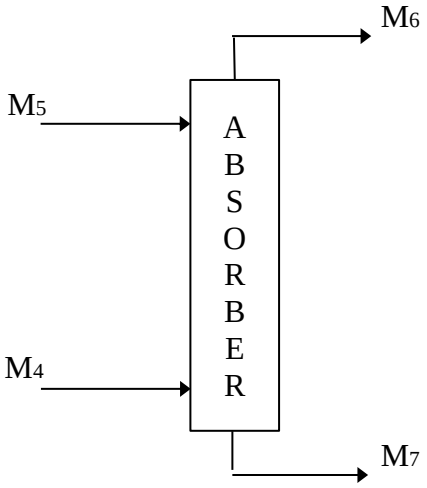

Keterangan:
M_4 : Aliran bahan masuk absorber
M_5 : Aliran pelarut air masuk absorber
M_6: Aliran produk gas keluar absorber
M_7: Aliran produk liquid keluar absorber

Masuk		Keluar	
Komponen	kg/jam	Komponen	kg/jam
M_4		M_6	
C_2H_5Cl	6376,9003	C_2H_5Cl	6313,1313
H_2O	2041,0234	C_2H_5OH	0,4600
C_2H_5OH	45,9971	HCl	0,1850
HCl	18,4996	H_2O	20,4102
Jumlah	8482,4204	Jumlah	6334,1865
		M_7	
		C_2H_5OH	45,5372
		HCl	18,3146
		C2H5Cl	63,7690
M_5		H_2O	2020,6132
H_2Osolven	2148,2339	H_2Osolven	2148,2339
Jumlah	2148,2339	Jumlah	4296,4679
Total	10630,6543	Total	10630,6544

1. Menghitung Viskositas

a. Viskositas cair umpan (Yaws)

$$\log \mu = A + \frac{B}{T} + CT + DT^2$$

Komponen	A	B	C	D	μ (Cp)	μ (kg/m.s)
H_2Osolven	-10,216	1792,500	0,01773	-1E-05	0,46721	0,0004672

b. Viskositas cair keluar(Yaws)

$$\log \mu = A + \frac{B}{T} + CT + DT^2 \quad (T = 50\ ^\circ C = 323,15\ K)$$

Komponen	A	B	C	D	μ (Cp)	μ (kg/m.s)
C_2H_5Cl	-4,4279	5,2E+02	1,20E-02	-2E-05	0,21451	0,00021
H_2O	-10,216	1792,500	0,01773	-1E-05	0,55158	0,00055
C_2H_5OH	-6,4406	1,12E+03	0,013721	-2E-05	0,68683	0,00069
H_2O	-10,216	1792,500	0,01773	-1E-05	0,55158	0,00055
H_2Osolven	-10,216	1792,500	0,01773	-1E-05	0,55158	0,00055
HCl	-1,515	1,95E+02	3,07E-03	-1E-05	0,04379	4,4E-05
Total					2,59986	0,0026

c. Viskositas gas umpan (Yaws)

Komponen	A	B	C	D	μ (Cp)	μ (kg/m.s)
C_2H_5Cl	0,458	3,28E-01	-1,25E-05	-	108,437	0,1084375
H_2O	-36,826	0,4290	-1,6E-05	-	104,297	0,1042973
C_2H_5OH	1,499	3,07E-01	6,35E-05	-	110,964	0,1109635
H_2O	-36,826	0,4290	-1,6E-05	-	104,297	0,1042973
HCl	-9,1	0,5550	-1,11E-04	-	163,46	0,1634605

d. Viskositas gas keluar (Yaws)

$\mu = A + B\ T + CT^2$ (T = 50 °C = 323,15 K)

Komponen	A	B	C	D	μ (Cp)	μ (kg/m.s)
HCl	-9,1	0,5550	-1,11E-04	-	158,639	0,158639
C_2H_5OH	1,499	3,07E-01	6,35E-05	-	110,964	0,1109635
C_2H_5Cl	0,458	3,28E-01	-1,25E-05	-	108,437	0,1084375
H_2O	-36,826	0,4290	-1,6E-05	-	104,297	0,1042973

2. Menghitung Densitas Masing-Masing Arus

a. Umpan masuk gas

ρ gas = (BM. XF. P)/RT

R = 0,08206 atm m^2/kmol K

Komponen	BM	M4	XF	XF.BM	ρ gas (kg/m^3)
C_2H_5Cl	64,5165	6376,900	0,751778	48,5021101	1,944753379
H_2O	18,0152	2041,023	0,240618	4,33478218	
C_2H_5OH	46,0688	45,9971	0,005423	0,24981445	
H_2O	18,0152	0,0000	0	0	
HCl	36	18,4996	0,002181	0,07952318	
Total		8482,420	1,0000	53,1662299	

b. Umpan solven (Yaws)

$\rho = A \times B^{-(1-T/Tc)^n}$ T = 60 C = 333,15 K

komponen	A	B	n	Tc (K)	ρ cair (kg/m^3)
H_2Osolven	0,3471	0,2740	0,28571	647,13	415,3320302

c. Gas Keluar

Komponen	BM	M6	XF	XF.BM	ρ gas (kg/m^3)
C_2H_5Cl	64,5165	6313,131	0,996676	64,3020434	2,427228975
H_2O	18,0152	20,4102	0,003222	0,0580491	
C_2H_5OH	46,0688	0,4600	7,26E-05	0,0033456	
HCl	36,46	0,1850	2,92E-05	0,00106496	

Total	6334,187	1,0000	64,3645031	

d. Output absorber berupa cairan T = 50 C = 323,15 K

Komponen	A	B	n	Tc (K)	ρ cair (kg/m^3)
C_2H_5Cl	0,32259	0,2746	0,2314	460,35	352,6603281
C_2H_5OH	0,2657	0,2640	0,2367	516,25	298,9563479
H_2O	0,3471	0,2740	0,28571	647,13	417,7127913
H_2Osolven	0,3471	0,2740	0,28571	647,13	417,7127913
HCl	0,4413	0,2696	0,3187	324,6500	442,1927643
Total		1,3562	1,3582	2595,51	1929,235023

3. Memilih Tipe dan Jenis *Packing*

Dirancang menggunakan *Packing* berdasarkan tabel 11.3 Coulson hal.591, dieroleh data-data sebagai berikut:

Tipe	Rischig rings	
Bahan	Ceramic	
Size	2	in
	51	mm
Bulk density	651	kg/m^3
Surface Area	95	m^2/m^3
Packing Factor (Fp)	210	m^{-1}

4. Menghitung Diameter Absorber

a. menghitung kecepatan masuk gas (Vw)

Vw* : Umpan gas masuk

Vw* : 8482,4204 kg/jam

Vw* : 2,356227889 kg/s

b. menghitung kecepatan aliran cairan keluar (Lw)

Lw* : Output absorber cairan

Lw* : 1,3562 kg/jam

Lw* : 0,000376711 kg/s

c. menghitung faktor laju gas-cair (Flv)

$$Flv = \frac{Lw^*}{Vw^*}\sqrt{\frac{\rho v}{\rho L}}$$

$$= \frac{0,000377}{2,356228}\left(\frac{1,94475}{352,66}\right)^{1/2}$$

$$= 1,18726E\text{-}05$$

Dirancang pressure drop adalah 8 mm H_2O/ m Packing. Berdasarkan figure 11.44 Hal. 603 Coulson, didapatkan nilai K_4 dan K_4 Flooding sebesar:

K_4 = 0,18

K_4 Flooding = 0,38

% Flooding = $\left[\frac{\text{K4 at design pressure drop}}{\text{K4 at Flooding}} \right]^{1/2}$

= 68,8247 %

d. Menghitung Vw (Kecepatan aliran gas perluas lintang menara)
persamaan 11.118 Hal. 604 Coulson

$$K_4 = \frac{13{,}1 \quad (Vw)^2 \quad Fp \quad (\mu L/\rho L)^{0.1}}{\rho V(\rho L-\rho V)}$$

$$Vw = \left(\frac{K4\ \rho V(\rho L-\rho V)}{13{,}1 \quad Fp\ (\mu L/\rho L)^{0.1}} \right)^{1/2}$$

$$= \left(\frac{0{,}18 \ \text{x}\ 1{,}94475\ (\ 1929{,}24\ -\ 1{,}94475\ )}{13{,}1\ \text{x}\ 210\ (\ 0{,}0026\ /\ 1929{,}24\ )^{0.1}} \right)^{1/2}$$

= 1,942394 kg/m^2 s

e. menghitung luas kolom yang dibutuhkan (Ac Required)

Ac Required = $\frac{Vw^*}{Vw}$

= $\frac{2{,}35623}{1{,}94239}$

= 1,21305 m^2

f. menghitung diameter design absorber

$$D = \left(\frac{4\ Ac}{\pi} \right)^{1/2}$$

$$= \left(\frac{4 \ \text{x}\ 1{,}21305}{3{,}14} \right)^{1/2}$$

= 1,2430974 m

= 48,940744 in

= 4,0783953 ft

5. Menentukan Volume Kolom Absoreber

Rate gas = 8482,4204 kg/jam = 18703,73698 lb/jam

Rate liquid = 2148,2339 kg/jam = 4736,85575 lb/jam

Rate volumetrik liquid = $\frac{\text{bahan masuk}}{\rho \text{ liquid}}$

$$= \frac{4736{,}856 \text{ lb/jam}}{25{,}9291 \text{ lb/ft}^3}$$

$= 3653{,}7 \text{ ft}^3\text{/jam}$

Volume liquid = 3653,70 ft^3/jam × 0,0667 jam

= 243,58 ft^3

Asumsi : volume ruang kosong 30 % volume total

Volume total = Volume liquida + Volume ruang kosong

= 243,58 ft^3 + 30% Volume total

70% vol. tot = 243,58 ft^3

vol. tot = 347,972 ft^3

6. Menentukan tinggi tangki Ls (Tinggi silinder)

Volume total = Vol. tutup bawah + Vol. silinder + Vol. tutup atas

347,9715362 = 0,0847 di^3 + $\pi/4 \times d^2 \times Ls$ + 0,0847 di^3

347,9715362 = 5,74581 + 13,0571 × Ls + 5,7458

347,9715362 = 11,4916 + 13,0571 Ls

336,4799 = 13,0571 Ls

Ls = 25,7698 ft

Ls = 309,237 in

Ls = 7,85465 m

Ls/di $= \frac{7{,}854647}{1{,}243097} =$ 6,31861 , karena Ls/di > 5 maka merupakan bejana panjang

7. Menentukan Tinggi Liquida dalam kolom

VLls = V. liquida + V. Tutup bawah

= 243,58008 + 0,0847 d^3

= 243,58008 + 5,74581

= 249,32589 ft^3

$$Lls = \frac{VLls}{\pi/4 \times d^2}$$

$$= \frac{249{,}32589}{13{,}057147}$$

= 19,094974 ft

= 229,13969 in

8. Menentukan Tekanan Design (Pi)

$Pi = P_{atm} + P_{hidrostatik}$

$$P_{hidrostatik} = \frac{\rho\,(HL - 1)}{144}$$

$$= \frac{25{,}9291 \;(\; 19{,}095 - 1 \;)}{}$$

$$\frac{\quad}{144}$$

= 3,258237 psia

Pi = P_{atm} + $P_{hidrostatik}$
= 14,696 + 3,258237
= 17,95424 psia
= 3,450331 psig

9. Menentukan Tebal Kolom (ts)

Tebal shell (ts) = $\frac{Pi.di}{2\ (f.E - 0,6\ Pi)} + C$

= $\frac{3,450331 \times 48,94074}{2\ (17100 \times 1 - 0,6 \times 3,45033)} + \frac{1}{16}$

= 0,068673 in x $\frac{16}{16}$

= $\frac{1,098765}{16} \approx \frac{3}{16}$

Standarisasi do

do = di_{lama} + 2 ts
= 48,941 + 2 x 3/16
= 49,315744 in

Dari Brownell & Young hal 91, didapatkan:

dost = 54 in
icr = 3 1/4 in
r = 54 in
ts = 3/16

di_{baru} = dost - 2 ts
= 54 - 2 x 3/16
= 53,625 in
= 4,46875 ft
= 1,362009 m

10. Menentukan Diameter *Packing*

karena diameter kolom > 0,9 m
maka diameter *Packing* 50 - 75 mn (2 - 3 in)
(Coulson & Richardson's ed. 4th Vol.6 hal 592)
dengan diameter (d1) = 2 in 0,16 ft r = 0,08 ft
Tinggi (L1) = 2 x d1

= 2 x 2
= 4 in
= 0,333 ft

11. Menentukan tebal tutup atas dan tutup bawah standart dished

$$tha/thb = \frac{0,885 \times pi \times r}{(f \times E - 0,1 \times pi)} + C$$

$$= \frac{0,885 \times 3,45033 \times 54}{(17100 \times 0,8 - 0,1 \times 3,45033)} + \frac{1}{16}$$

$$= 0,0745538 \text{ in} \times \frac{16}{16}$$

$$= \frac{1,1928602}{16} \approx \frac{3}{16}$$

Tinggi tutup atas dan tutup bawah

ha/hb = 0,169 x d
= 0,169 x 53,6250
= 9,062625 in

Tinggi kolom absorber (H) = (2 x ha + Ls
= (2 x 9,06263) + 309,2375
= 327,3627 in
= 27,28023 ft

Dari perhitungan diatas, maka diperoleh dimensi kolom absorber sebagai berikut:

do	=	54	in	=	4,5	ft
di	=	53,6250	in	=	4,46875	ft
Ls	=	309,2375	in	=	25,7698	ft
d1	=	2	in	=	0,16667	ft
L1	=	4	in	=	0,33333	ft
tha/thb	=	3/16	in	=	3535,83	ft
ha/hb	=	9,062625	in	=	0,75522	ft
ts	=	3/16	in	=	3535,83	ft
H	=	327,36271	in	=	27,2802	ft

12. Perancangan Nozzle

Nozzle pada kolom Absorber dibagi menjadi 4 macam:

- Nozzle liquid masuk
- Nozzle gas masuk
- Nozzle gas keluar top kolom
- Nozzle liquid kleuar bottom kolom

Perhitungan :

1. Nozzle liquid masuk

Rate masuk = 2041,0234 kg/jam

= 4736,85575 lb/jam

ρ Liquid = 25,9291 lb/ft^3

Rate Volumetrik = $\frac{m}{\rho \text{ Liquid}}$

= $\frac{4736,86 \text{ lb/jam}}{25,9291 \text{ lb/ft}^3}$

= 182,685 ft^3/jam

= 0,05075 $ft^3/detik$

Asumsi : aliran turbulen

Dari Peters & Timmerhause 4th, hal. 496 didapat di optimum:

ID optimum = $3,9 \times Q^{0.45} \times \rho^{0.13}$

= $3,9 \times 0,05075^{0.45} \times 25,9291^{0.13}$

= 1,556995 in

= 0,12975 ft

Dari tabel 11 (Kern, 1965) hal.844. maka dipilih pipa 1 1/2 in sch 40

OD =	1,9	in	=	0,158	ft
ID =	1,61	in	=	0,134	ft
a' =	2,04	in^2	=	0,014	ft^2

Pengecekan Bilangan Reynold

Nre = $\frac{G \times ID}{\mu \times a'}$

= $\frac{4736,85575 \times 0,134}{0,000313948 \times 0,014}$

= 142892540,3

Maka anggapan menggunakan aliran turbulen adalah benar.

Spesifikasi nozzle standar (Brownell and Young, 1959, App. F item 1 dan 2 , hal. 349)

Size	=	1 1/2	in
OD of pipe	=	1,9	in
Flange Nozzle thickness (n)	=	0,2	in
Diameter of hole in reinforcing plate (DR)	=	2	in
Length of side of reinforcing plate, L	=	-	in
Width of reinforcing plate, W	=	-	in
Distance, shell to flange face, outside, J	=	6	in

Distance, shell to flange face, inside, K	=	6	in
Distance from bottom of tank to center of nozzle			
- Regular, Type H	=	6	in
- Low, Type C	=	3	in

2. Nozzle gas masuk

Rate masuk = 8482,4204 kg/jam

= 18703,737 lb/jam

ρ gas = 0,1214 lb/ft^3

Rate Volumetrik = $\frac{m}{\rho \text{ gas}}$

= $\frac{18703,7 \text{ lb/jam}}{0,1214 \text{ lb/ft}^3}$

= 154054 ft^3/jam

= 42,7927 ft^3/detik

Asumsi : aliran turbulen

Dari Peters & Timmerhause 4th, hal. 496 didapat di optimum:

ID optimum = $3,9 \times Q^{0.45} \times \rho^{0.13}$

= $3,9 \times 42,7927^{0.45} \times 0,1214^{0.13}$

= 16,07438 in

= 1,339532 ft

Dari tabel 11 (Kern, 1965) hal.844. maka dipilih pipa 18 in sch 40

OD =	18	in	=	1,5	ft
ID =	17,25	in	=	1,438	ft
a' =	234	in^2	=	1,625	ft^2

Pengecekan Bilangan Reynold

Nre = $\frac{G \times ID}{\mu \times a'}$

= $\frac{18703,73698 \times 1,438}{0,109840538 \times 1,625}$

= 150633,0332

Maka anggapan menggunakan aliran turbulen adalah benar.

Spesifikasi nozzle standar (Brownell and Young, 1959, App. F item 1 dan 2 hal. 349)

Size	=	18	in
OD of pipe	=	18	in
Flange Nozzle thickness (n)	=	1/2	in

Diameter of hole in reinforcing plate (DR)	=	18	1/8	in
Length of side of reinforcing plate, L	=	39		in
Width of reinforcing plate, W	=	47	5/8	in
Distance, shell to flange face, outside, J	=	10		in
Distance, shell to flange face, inside, K	=	8		in
Distance from bottom of tank to center of nozzle				
- Regular, Type H	=	22		in
- Low, Type C	=	19	1/2	in

3. Nozzle gas keluar top kolom

Rate keluar = 6334,1865 kg/jam

= 13966,8812 lb/jam

ρ gas = 0,1515 lb/ft^3

Rate Volumetrik = $\frac{m}{\rho \text{ gas}}$

= $\frac{13966,9 \text{ lb/jam}}{0,1515 \text{ lb/ft}^3}$

= 92171,6 ft^3/jam

= 25,6032 ft^3/detik

Asumsi : aliran turbulen

Dari Peters & Timmerhause 4th, hal. 496 didapat di optimum:

ID optimum = $3,9 \times Q^{0.45} \times \rho^{0.13}$

= $3,9 \times 25,6032^{0.45} \times 0,1515^{0.13}$

= 13,12993 in

= 1,094161 ft

Dari tabel 11 (Kern, 1965) hal.844. maka dipilih pipa 14 in sch 40

OD =	14	in	=	1,167	ft
ID =	13,25	in	=	1,104	ft
a' =	138	in^2	=	0,958	ft^2

Pengecekan Bilangan Reynold

Nre = $\frac{G \times ID}{\mu \times a'}$

= $\frac{13966,88123 \times 1,104}{0,10660063 \times 0,958}$

= 150958,5463

Maka anggapan menggunakan aliran turbulen adalah benar.

Spesifikasi nozzle standar (Brownell and Young, 1959, App. F item 1 dan 2 hal. 349)

Size	=	14		in
OD of pipe	=	14		in
Flange Nozzle thickness (n)	=	1/2		in
Diameter of hole in reinforcing plate (DR)	=	14	1/8	in
Length of side of reinforcing plate, L	=	31		in
Width of reinforcing plate, W	=	38		in
Distance, shell to flange face, outside, J	=	10		in
Distance, shell to flange face, inside, K	=	8		in
Distance from bottom of tank to center of nozzle				
- Regular, Type H	=	18		in
- Low, Type C	=	15	1/2	in

4. Nozzle liquid keluar bottom kolom

Rate keluar = 4296,4679 kg/jam

= 9473,71172 lb/jam

ρ Liquid = 120,4417 lb/ft^3

Rate Volumetrik = $\frac{m}{\rho \text{ Liquid}}$

= $\frac{9473,71 \text{ lb/jam}}{120,4417 \text{ lb/ft}^3}$

= 78,6581 ft^3/jam

= 0,02185 ft^3/detik

Asumsi : aliran turbulen

Dari Peters & Timmerhause 4th, hal. 496 didapat di optimum:

ID optimum = $3,9 \times Q^{0.45} \times \rho^{0.13}$

= $3,9 \times 0,02185^{0.45} \times 120,442^{0.13}$

= 1,30111 in

= 0,108426 ft

Dari tabel 11 (Kern, 1965) hal.844. maka dipilih pipa 1 1/2 in sch 40

OD	=	1,9	in	=	0,158	ft
ID	=	1,61	in	=	0,134	ft
a'	=	2,04	in^2	=	0,014	ft^2

Pengecekan Bilangan Reynold

$$Nre = \frac{G \times ID}{\mu \times a'}$$

$$= \frac{9473{,}71172 \times 0{,}134}{0{,}001747026 \times 0{,}014}$$

= 51356784,62

Maka anggapan menggunakan aliran turbulen adalah benar.

Spesifikasi nozzle standar (Brownell and Young, 1959, App. F item 1 dan 2 hal. 349)

Size	=	1 1/2	in
OD of pipe	=	1,9	in
Flange Nozzle thickness (n)	=	0,2	in
Diameter of hole in reinforcing plate (DR)	=	2	in
Length of side of reinforcing plate, L	=	-	in
Width of reinforcing plate, W	=	-	in
Distance, shell to flange face, outside, J	=	6	in
Distance, shell to flange face, inside, K	=	6	in
Distance from bottom of tank to center of nozzle			
- Regular, Type H	=	6	in
- Low, Type C	=	3	in

Dari Brownell & Young tabel 12.2 halaman 221 diperoleh dimensi flange untuk untuk semua nozzle, dipilih flange standart type welding neck dengan dimensi nozzle:

- Nozzle 1 = Nozzle liquid masuk
- Nozzle 2 = Nozzle gas masuk
- Nozzle 3 = Nozzle gas keluar top kolom
- Nozzle 4 = Nozzle liquid keluar bottom kolom
- NPS = ukuran pipa nominal, in
- A = Diameter luar flange, in
- T = Ketebalan minimum flange, in
- R = Diameter luar bagian yang menonjol, in
- E = Diameter hubungan atas, in
- K = Diameter hubungan pada titik pengelasan, in
- L = Panjang julukan, in
- B = Diameter dalam flange, in

Fig. 12.2, hal 221, Brownell & Young:

Nozzle	NPS	A	T	R	E	K	L	B
1	1 1/2	5	11/16	2 7/8	2 9/16	1,9	2 7/16	1,61
2	18	25	1 9/16	21	19 7/8	18	5 1/2	17,25
3	14	21	1 3/8	16 1/4	15 3/4	14	5	13,25
4	1 1/2	5	11/16	2 7/8	2 9/16	1 8/9	2 7/16	1,61

13. Perhitungan Sparger gas umpan

Dasar Perancangan :

Rate gas = 8482,420 kg/jam = 18703,737 lb/jam

Densitas umpan = 0,1214 lb/ft^3

suhu = 140 F

P gas = 14,696 psia

Perhitungan :

Menghitung luas area sparger

Rate volumetrik (Q) = $\frac{18703,74 \text{ lb/jam}}{0,1214 \text{ lb/ft}^3}$

= 154053,703 ft^3/jam

= 2567,562 ft^3/menit

FPM = 25 (www.Mott Corporation.com-sparger design guide)

ACFM = Rate volumetrik x $\frac{14,7}{(14,7 + P)}$ x $\frac{(460 + T)}{520}$

= 2567,5617 x $\frac{14,7}{14,7 + 14,7}$ x $\frac{(460 + 140)}{520}$

= 1481,285603 ft^3/menit

Luas Area sparger (A) = $\frac{ACFM}{FPM}$

= $\frac{1481,285603}{25}$

= 9,875237355 ft^2

= 1422,034179 in^2

A = 1/4 π D^2

9,875237355 = 0,785 D^2

D^2 = 12,5799202

D = 3,5468 ft

= 42,56181984 in

Trial jarak lubang agar harga At perhitungan sama dengan trial

Jarak antar lubang PT = 10 in

Luas satu segitiga = 1/2 (PT x sin 60) x PT

= 43,3013 in^2

= 0,3007 ft^2

Luas lubang sparger (A) = $\frac{9,87524}{90000}$

= 0,00011 ft^2

A = 1/4 π D^2

0,000109725 = 0,785 D^2

D^2 = 0,00013978

D = 0,0118 ft
= 0,14187273 in

Menentukan jumlah lubang

Jumlang lubang = $\frac{1422,03418}{43,3012702}$
= 32,8405 = 33 buah

14. Sambungan Antar Tutup dengan Shell

Untuk mempermudah pemeliharaan dan perbaikan dari kolom absorber, maka tutup menara dihubungkan dengan bagian shell menggunakan system flange, bolting, dan gasket

Data Perancangan :

a. Flange

Dari apendiks D Brownell & Young, hal. 344, diperoleh:

Bahan = High alloy steel SA-336, Grade F8, Type 304
Tensile streght minimum = 75000
Allowable stress = 17910
Type flange = Loose ring flange type
(Brownell & Young Hal.219)

b. Bolting

Dari apendiks D Brownell & Young, hal. 344, diperoleh:

Bahan = High alloy steel SA-193, Grade B8T, Type 321
Tensile streght minimum = 75000
Allowable stress = 3750

c. Gasket

(fig.12.11, Brownell & Young)

Bahan = Solid flat metal (stainlees steel)
Gasket faktor (m) = 6,5
Minimum design seating stress (y) = 26000

a. Penentuan lebar gasket

Penentuan lebar gasket dengan menggunakan pers. 12.2, hal 226, Brownell & Young didapatkan:

$$\frac{do}{di} = \sqrt{("y - p.m" / "y}$$

dimana:

do = diameter luar gasket, in
di = diameter dalam gasket, in
p = internal pressure = 14,699 psi
m = gasket faktor = 6,5 in (fig.12.11, Brownell & Young)

y = min. design seating stress = 26000 ps (fig.12.11, Brownell & Young)

maka:

$$\frac{do}{di} = \sqrt{\frac{26000 - 14,699 \times 6,5}{26000 - 14,699 \times (6,5 + 1)}}$$

= 1,0003

di = do shell = 54 in

sehingga:

do = 54 x 1,0003

do = 54,0153 in

Lebar gasket minimum (n)

$$n = \frac{do - di}{2} = \frac{54,0153 - 54}{2}$$

$$= 0,00766358 \times \frac{16}{16}$$

$$= \frac{0,12262}{16} = \frac{3}{16}$$

Diameter rata-rata gasket (G) = di + lebar

$$= 54 + \frac{3}{16}$$

= 54,1875 in

= 4,515625 ft

Beban Gasket

Wm_2 = H_y = p x b x G x y (Brownell & Young hal. 240)

Dimana: b = lebar efektif gasket (in)

y = yield (ln/in^2)

G = diameter rata-rata gasket = 54,1875 in

Dari fig. 12.12, hal 229 Brownell & Young didapatkan:

Lebar seating gasket, bo $= \frac{n}{2}$

$$= \frac{0,0077}{2}$$

= 0,0038 in

Untuk b ≤ 0,25 in maka, b = bo, sehingga:

Wm_2 = H_y = 3,14 x 0,0038 x 54,1875 x 26000

= 16951,341 lb

Beban baut karena internal pressure (H)

$$H = \frac{\pi \times G^2 \times P}{4}$$

$$= \frac{3{,}14 \times 2936{,}28516 \times 14{,}7}{4}$$

$$= 33883{,}2626 \text{ lb}$$

Beban tanpa tekanan (Hp)

$$Hp = 2 \times b \times \pi \times G \times m \times p$$

$$= 2 \times 0{,}0038 \times 3{,}14 \times 54{,}1875 \times 6{,}5 \times 14{,}7$$

$$= 124{,}59236 \text{ lb}$$

Jadi total beban pada kondisi operasi

$$Wm_1 = H + Hp$$

$$= 33883{,}2626 + 124{,}5924$$

$$= 34007{,}8549 \text{ lb}$$

Karena $Wm_1 > Wm_2$ maka yang mengontrol adalah Wm_1

b. Perhitungan luas minimum bolting (baut) area

Dengan menggunakan pers. 12.92 Hal. 240 Brownell & Young

$$Am_1 = \frac{Wm_1}{fb}$$

$$= \frac{34007{,}8549}{3750}$$

$$= 9{,}068761 \text{ in}^2$$

c. Perhitungan bolt minimum

Berdasarkan Brownell & Young hal. 188 Tabel 10.4 didapatkan:

Trial:

Ukuran baut = 1 3/8 in

root Area = 1,16 in^2

bolting spacing = 3 1/16 in

jarak radial minimum (R) = 1 7/8 in = 1,875 in

jarak dari tepi (e) = 1 3/8 in = 1,375 in

$$N = \frac{Am_1}{\text{root area}}$$

$$= \frac{9{,}0687613 \text{ in}^2}{1{,}155 \text{ in}^2}$$

$$= 7{,}8517$$

$$= 8 \text{ buah}$$

Diameter area baut (C)

c = ID shell + 2 (1,416 x go + R)

Dimana

IDs = 53,6250 in

go = $\frac{3}{16}$ = 0,1875 in

sehingga:

C = 53,6250 + 2 (1,416 x 0,1875 + 1,875)

= 57,905963 in

Diameter luar flange (A)

A = OD = Bolt area diameter + 2 E

= C + 2 E

= 57,90596 + 2 x 1,375

= 60,65596 in

Evaluasi lebar gasket:

Ab aktual = jumlah baut x root area

= 8 x 1,155

= 9,2400 in^2

Lebar gasket minimum

$$W = \frac{Ab\ aktual \times F}{2 \times \pi \times G \times Y}$$

$$= \frac{9{,}2400 \times 3750}{2 \times 3{,}14 \times 54{,}1875 \times 26000}$$

= 0,0039163 in

Lebar flange

$$\text{Lebar flange} = \frac{\text{OD flange} - \text{OD vessel}}{2}$$

$$= \frac{60{,}656 - 54}{2}$$

= 3,32798 in

Lebar gasket

Lebar gasket = Lebar flange - Lebar baut - E

= 3,32798 - 1,155 - 1,375

= 0,7980 in

Lebar gasket minimum 0,00392 in < 0,7980 in telah memenuhi

d. Perhitungan moment

Untuk keadaan bolting up (tanpa tekanan dalam) persamaan 12-94 Hal. 242 Brownell & Young

$$W = \frac{(Am1 + Ab) \times fa}{2}$$

$$= \frac{(9{,}068761 + 9{,}2400) \times 3750}{2}$$

$$= 34328{,}927 \text{ lb}$$

Jarak radial dari beban gasket yang bereaksi terhadap bolt circle (h_G) adalah:

$$h_G = \frac{1}{2}(C - G) \quad \text{(Pers. 12.101 Brownell \& Young)}$$

$$= \frac{1}{2}(57{,}906 - 54{,}1875)$$

$$= 1{,}85923125 \text{ in}$$

Moment flange (Ma)

$$Ma = h_G \times W \quad \text{(Tabel 12.4 Brownell \& Young)}$$

$$= 1{,}8592313 \times 34328{,}9275$$

$$= 63825{,}4147 \text{ lb.in}$$

Untuk keadaan moment pada kondisi operasi:

$$W = Wm1$$

$$= 34007{,}8549 \text{ lb}$$

Gaya hidrostatik pada daerah dalam flange (H_D)

$$H_D = 0{,}785 \times B^2 \times P$$

dimana:

B = DO shell = 54 in

p = Tekanan desain = 14,7 psi

$$H_D = 0{,}785 \times 2916{,}00 \times 14{,}7$$

$$= 33649{,}1820 \text{ lb}$$

Jarak jari-jari bolt circle H_D (h_D)

$$h_D = 0{,}5 (C - B) \quad \text{(Pers. 12.100 Brownell \& Young)}$$

$$= 0{,}5 (57{,}906 - 54)$$

$$= 1{,}9530 \text{ in}$$

Moment komponen (M_D)

M_D = H_D x h_D (Pers. 12.96 Brownell & Young)

= 33649,1820 x 1,9530

= 65716,2215 lb.in

Perbedaan antara beban berat flange dengan gaya hidrostatis total (H_G)

H_G = W - H = Wm1 - H

= 34007,8549 - 33883,2626

= 124,5924 lb

Moment komponen (M_G)

M_G = H_G x h_G (Pers. 12.98 Brownell & Young)

= 124,5924 x 1,8592

= 231,64600 lb.in

Perbedaan antara gaya hidrostatis total dengan gaya hidrostatis dalam area flange:

H_T = H - H_D (Pers. 12.97 Brownell & Young)

= 33883,2626 - 33649,1820

= 234,0806 lb

Hubungan lever arm (h_T)

hT = 0,5 (h_D + h_G) (Pers. 12.102 Brownell & Young)

= 0,5 (1,9530 + 1,859231)

= 1,9061063 in

Moment komponen (M_T)

M_T = H_T x h_T (Pers. 12.97 Brownell & Young)

= 234,0806 x 1,90611

= 446,18242 lb.in

Total moment pada keadaan operasi (Mo) (Pers. 12.97 Brownell & Young)

Mo = MD - MG + MT

= 65716,2215 - 231,6460 + 446,182

= 65038,3931 lb.in

Karena Ma < Mo, maka M_{max} = Mo = 65038,39310 lb.in

Flange

Perhitungan tebal flange

Tf = (y x Mo / f x B)^0,5 (Pers. 12.85 Hal. 239 Brownell & Young)

dimana:

f	=	stress yang diijinkan untuk bahan flange	=	17910	psi
B	=	diameter luar shell	=	54	in
A	=	diameter luar flange	=	60,656	in

Maka:

$$K = \frac{A}{B}$$

$$= \frac{60,655963}{54}$$

$$= 1,1232586$$

Dari fig. 12.22 Brownell & Young hal, 238 diperoleh harga y = 19

$$Tf = \left(\frac{19 \times 65038,393}{17910 \times 54} \right)^{0,5}$$

$$= 1,1304 \text{ in}$$

Jadi digunakan tebal flange = 1,5 in

Kesimpulan perancangan:

a. Bagian flange

Bahan konstruksi	=	High alloy steel SA-336, Grade F8, Type 304
Tensile stress minimum	=	75000
Allowable stress (f)	=	17910
ID	=	54 in
Tebal	=	1,5 in
OD	=	60,6560 in
Type flange	=	Loose ring flange type

b. Bagian bolting

Bahan konstruksi	=	High alloy steel SA-193, Grade B8T, Type 32
Ukuran	=	1 3/8 in
Jumlah	=	8 buah
Bolt circle diameter (C)	=	57,90596 in
Jarak dari tepi	=	1,375 in
Jarak radial minimum	=	1,875 in

c. Bagian gasket

Bahan konstruksi	=	Solid flat metal (stainlees steel)

Gasket faktor (m)	=	6,5	in
design seating stress	=	26000	psia
Tebal gasket	=	0,122617	in

15. Sistem Penyangga (Support)

Sistem penyangga dirancang agar mampu untuk menyangga beban kolom absorber dan perlengkapannya. Beban-beban yang ditahan oleh kolom absorber meliputi :

A. Berat shell stripper

B. Berat tutup atas & bawah standart dished

C. Berat liquid dalam kolom absorber

D. Berat attachement

Dasar perhitungan:

A. Menentukan berat kolom absorber

Berat reaktor terdiri dari:

a. Berat shell reaktor

$Ws = \pi/4 (do^2 - di^2) H. r$ (Pers. 4-16 Hal.92 Hesse)

dimana:

Ws	=	berat shell reaktor, lb						
do	=	diameter luar shell	=	54	in	=	4,5	ft
di	=	diameter dalam shell	=	53,625	in	=	4,47	ft
H	=	tinggi shell (Ls)	=	309,237	in	=	25,8	ft
r	=	densitas dari bahan konstruksi	=	489	lb/ft^3			

(Perry ed,7 Tabel 2-118 Hal. 2-119, steel cold drawn)

$$Ws = \frac{3,14}{4} (20,25 - 19,97) 25,77 \times 489$$

= 2772,498392 lb

= 1257,369 kg

b. Berat tutup atas dan tutup bawah

Wd = A x t x r

A = 6,28 x L x h (Hesse, pers. 4-16 Hal. 92)

dimana:

Wd	=	berat tutup atas dan bawah reaktor, lb						
A	=	luas tutup atas dan bawah standart dishead, ft^2						
t	=	tebal tutup	=	(3/16)	in	=	0,01563	ft
r	=	ρ bahan konstruksi	=	489	lb/ft^3			
L	=	crown radius (R)	=	54,0000	in	=	4,5	ft
h	=	tinggi tutup reaktor	=	9,06	in	=	0,75522	ft

Luas tutup atas dan bawah:

A = 6,28 x 4,5 x 0,755

= 21,3425 ft^2

Berat tutup atas dan bawah:

Wd = 21,3425 x 0,016 x 489

= 163,0699 lb

= 2 x 163,0699

= 326,1398 lb

= 147,9092 kg

c. Berat liquid dalam kolom absorber

W1 = m x t

dimana:

m = berat larutan dalam kolom absorber = 2148,2339 kg/j

= 78,9476 lb/min

t = waktu tinggal liquid dalam kolom absorber = 4 menit

W1 = 78,9476 x 4

= 315,7903833 lb

d. Attachment

Berat attachment meliputi seluruh perlengkapan seperti nozzle dsb. :

Dari Brownell & Young, hal. 157:

Wa = 18% Ws

Dimana:

Wa = berat attachment, lb

Ws = berat shell kolom absorber = 2772,49839 lb

Wa = 18 % x Ws

= 0,18 x 2772,5

= 499,0497 lb

= 226,3264 kg

e. berat packing

Berat jenis = 651 kg/m^3 = 40,6418 lb/ft^3

Asumsi tinggi packing 70% dari tinggi silinder

L = 70% x Ls

= 70% x 309,2375

= 216,4662198 in

= 18,03885 ft

$V = \frac{\pi}{4}(di^2 \times L)$

$= \frac{3,14}{4}(4,46875^2 \times 18,0389)$

$= 282,7812839\ ft^3$ Maka jumlah packing #DIV/0!

Maka berat packing (Wp) = $282,7813\ ft^3 \times 40,6418\ lb/ft^3$

= 11492,73 lb

Berat total penyangga :

Wt = Ws + Wd + W1 + Wa + Wp

= 2772,498392 + 326,1398 + 315,790383 + 499,0497 + 11492,73416

= 15406,2125 lb

Untuk faktor keamanan (faktor safety) 10% maka berat total:

W total = 1,1 x Wt

= 1,1 x 15406,21245

= 16946,8337 lb

B. SISTEM PENYANGGA

Sebagai penyangga digunakan sistem lug, sehingga:

$P = \frac{4 \times P_W \times (H - L)}{n \times Dbc} + \frac{\Sigma W}{n}$

Dimana :

P : beban tiap kolom

Pw : total beban permukaan karena angin

H : tinggi vessel dari pondasi

L : jarak antara vessel dengan dasar pondasi

Dbc : diameter anchor bolt circle

n : jumlah support

ΣW : berat total

Asumsi : tekanan angin diabaikan, maka berlaku rumus

Absorber terletak didalam ruangan sehingga = 0, maka :

$P = \frac{\Sigma W}{n}$

$= \frac{16946,8337}{4}$

= 4236,708424 lb

= 1921,409716 kg

C. Menentukan Kolom Support

Rencana

Kolom penyangga = 4 buah

Jenis kolom = I-beam

Data

Beban tiap kolom = 1921,40972 kg

4236,70842 lb

Tinggi bejana total (H) = 327,363 in = 27,280226 ft

Menentukan tinggi kolom (L)

Ditentukan jarak kolom absorber dengan lant = 5 ft

L = 0,5 H + 0,5 jarak kolom dengan lantai

= 0,5 x 27,28023 + 0,5 x 5

= 16,140113 ft

= 193,68135 in

Jadi tinggi leg = 16,1401 ft

= 4,9193 m

Trial ukuran I-beam

Untuk pemilihan beam dicoba menggunakan ukuran 4 in 4x2 5/8 dengan berat 9.5 lb Axis 1-1 dari Brownell & Young Hal. 355 Item 2

didapatkan data sebagai berikut:

b = 2,796 in

h = 4 in

Ay = 2,76 in^2

r = 1,56 in

Maka:

$$\frac{L}{r} = \frac{193,68135}{1,56}$$

= 124,15471

Untuk L/r = > 120 maka :

$$fc = \frac{18000}{1 + \frac{L^2}{18000\ r^2}}$$ (Brownell & Young Hal. 201)

$$= \frac{18000}{1 + \frac{193,6813534^2}{18000 \times 1,56^2}}$$

= 9696,4204 psi

fc aman = fc, maka:

$$A = \frac{P}{fc\ aman}$$

$$= \frac{4236{,}708424\ lb}{9696{,}420359\ psi}$$

$$= 0{,}4369\ in^2$$

Karena A yang dibutuhkan lebih kecil dari A yang tersedia maka I-Beam ukuran 4x2 5/8 dengan berat 9.5 lb memadai.

16. Perencanaan Base Plate

Dibuat base plate dengan toleransi panjang 5% dan toleransi lebar 20% (Hesse, Hal 163)

Bahan base plate = Concrate beton, maka :

fbp = 463 lb/in^2 (Hesse, Tabel 7.7 hal. 162)

Menentukan luas base plate

$$Abp = \frac{P}{fbp}$$

Abp = luas base plate (in^2)

P = beban dari tiap base plate

fbp = stress yang diterima oleh pondasi yang terbuat dari beton

Sehingga:

$$Abp = \frac{4236{,}708424\ lb}{463{,}0219842\ lb/in^2}$$

$$= 9{,}15012\ in^2$$

Menentukan panjang dan lebar base plate

Abp = l x p

dimana:

l = lebar base plate = 2 n + 0,8 b

p = panjang base plate = 2 m + 0,95 h

Dengan I-beam 10 in :

b = 2,796 in

h = 4 in

Dengan mengasumsikan m = n, maka:

Abp = (2 m + 0,95 h) x (2 n + 0,8 b)

9,1501 = [2m + (0,95 x 4)] x [2m + (0,8 x 2,80

9,1501 = 2m + 3,800 x 2m + 2,2368

9,1501 = 4 m^2 + 4,4736 m + 7,600 m + 8,49984

9,1501 = 4 m^2 + 12,0736 m + 8,49984

0 = 4 m2 + 12,0736 m + -0,6503

Dengan menggunakan rumus persamaan kuadrat, didapatkan

$$m_{1,2} = \frac{-b \pm \sqrt{b^2 - 4\,ac}}{2\,a}$$

m_1 = 0,052932

m_2 = -3,07133

Didapatkan nilai m = n = 0,052932 in, maka :

L = 2 n + 0,8 b

= 2 x 0,052932 + 0,8 2,796

= 2,3426635 in = 3 in

P = 2 m + 0,95 h

= 2 x 0,052932 + 0,95 x 4

= 3,9059 in = 4 in

Jadi luas base plate = P x L

= 4,0000 x 3,0000

= 12 in

Beban yang harus ditahan:

$$Fc = \frac{P}{A}$$

$$= \frac{4236,708}{12}$$

= 353,0590 lb/in^2 (memenuhi karena < 600 lb/in^2)

Menghitung nilai m dan n baru

L = 2 n + 0,8 b

3 = 2 n + 0,8 x 2,796

3 = 2 n + 2,2368

2 n = 0,7632

n = 0,3816

$P = 2m + 0{,}95\ h$

$4 = 2m + 0{,}95 \times 4$

$4 = 2m + 3{,}800$

$2m = 0{,}200$

$m = 0{,}100$

nilai yang terbesar diambil untuk menghitung tebal base plate (tbp)

$t_{bp} = \sqrt{0{,}00015\ f_{bar} \times n^2}$

$= \sqrt{0{,}00015 \times 353{,}0590 \times 0{,}14562}$

$= 0{,}0878$ in

Menentukan ukuran baut

Jumlah baut = 4 buah

$P_{baut} = \frac{P}{n}$

$= \frac{4236{,}708424}{4}$

$= 1059{,}1771$ lb

Menentukan luas baut (A_{baut})

$A_{baut} = \frac{P_{baut}}{ft}$

dimana:

A_{baut} = luas baut

P_{baut} = beban tiap baut = 1059,177 lb

ft = stress maksimal tiap baut = 12000 psi

maka:

$A_{baut} = \frac{1059{,}1771}{12000}$

$= 0{,}0883\ in^2$

$A_{baut} = \frac{1}{4} \times \pi \times db^2$

$0{,}0883 = 0{,}7850\ db^2$

$db^2 = 0{,}112439$

$db = 0{,}3353$

$= 1/2$ in

Dari tabel 10.4 hal. 188 Brownell & Young, didapatkan baut dengan ukuran 0,5 in adalah :

Ukuran = 0,5 in

Root area	=	0,126	in
Bolt spacing	=	1 1/4	in
Minimum radial distance	=	1 3/16	in
Edge distance	=	5/8	in
Nut dimension	=	7/8	in
Maximum fillet radius	=	1/4	in

17. Perencanaan Lug dan Gusset

Direncanakan menggunakan :

2 Plate horizontal (lug)

2 Plate vertikal (gusset)

Dari fig. 10.6 hal. 191 Brownell & Young

didapatkan nilai A = ukuran baut + 9 in

Lebar lug = A = 0,5 + 9

= 9,5000 in

Jarak antar gusset = b = ukuran baut + 8 in

= 0,5 + 8

= 8,5000 in

Lebar gusset = l = 2 x (lebar base plat - 0,5 ukuran baut)

= 2 x (3 - 0,5 x 0,5)

= 5,5000 in

Lebar lug atas (a) = $\frac{1}{2}$ (1 + ukuran baut)

= $\frac{1}{2}$ (1 + 0,5)

= 0,7500 in

Perbandingan tebal base plate = $\frac{b}{l}$

= $\frac{8,500 \text{ in}}{5,500 \text{ in}}$

= 1,545

didapat nilai b/l = 1,5455 digunakan tabel 10.6 Hal. 192 Brownell & Young)

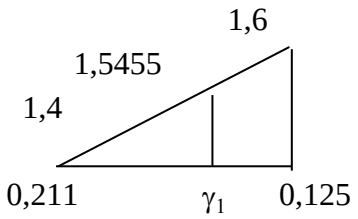

$$\frac{1,6 - 1,545}{1,6 - 1,4} = \frac{0,125 - \gamma_1}{0,125 - 0,21}$$

$$-\gamma_1 = -0,1485$$

$$\gamma_1 = 0,1485$$

γ_1 = 0,1485

e = 0,5 x nut dimension
= 0,5 x 7/8
= 0,4375

Menentukan maksimum bending sepanjang sumbu radial
Pers. 10.38 Hal 192 Brownell & Young

$$M_Y = \frac{P}{4\pi}\left[(1+\mu) \times \ln\frac{2L}{\pi e} + (1-\gamma_1)\right]$$

dimana:

P = beban tiap baut = 1059,1771 lb
μ = posson's ratio = 0,3 untuk steel
L = panjang horizontal plate bawah = 5,5000 in
e = nut dimension = 7/8 in = 0,875 in
γ_1 = 0,1485

Jadi:

$$M_Y = \frac{1059,1771}{4 \times 3,14}\left[(1+0,3) \times \ln\frac{2 \times 5,5000}{3,14 \times 0,875} + (1-0,1485)\right]$$

= 84,32938742 [2,65491]
= 223,8870 lb

M_Y disubstitusi ke pers. 10.41 Hal. 193 Brownell & Young, sehingga diperoleh:

t_{hp} = $\sqrt{((6 \times M_y)/f)}$

dimana:

t_{hp} = tebal horizontal plate
t_{hp} = 0,5985141 in
Maka digunakan plate dengan tebal = 0,5985 in

dari fig. 10.6 hal. 191 pers. 10.47 hal. 194 diperoleh :

tebal gusset minimal = 0,375 x t_{hp}
= 0,375 x 0,599
= 0,22444 in
tinggi gusset = Hg = A + ukuran baut
= 9,5000 + 0,5
= 10,0000 in
tinggi lug = Hg + 2 t_{hp}
= 10,0000 + 2 x 0,5985
= 11,1970 in

Kesimpulan

Dimensi lug dan gusset

- lug

lebar	=	9,5000	in
tebal	=	0,598514	in
tinggi	=	11,1970	in

- gusset

lebar	=	5,5000	in
tebal	=	0,224443	in
tinggi	=	10,0000	in

18. Perancangan Pondasi

Perencanaan:

Beban total yang harus ditahan pondasi

- berat reaktor total
- berat kolom penyangga
- berat base plate

Ditentukan:

- masing-masing penyangga diberi pondasi
- spesifik untuk semua penyangga sama

Dasar perhitungan:

a. Berat total absorber

W = 15406,2125 lb = 6986,94442 kg

b. Beban yang harus ditanggung tiap kolom

Rumus:

W_{bp} = p x l x t x ρ

dimana:

p	=	panjang base plate	=	4	in	=	0,3333	ft
l	=	lebar base plate	=	3	in	=	0,25	ft
t	=	tebal base plate	=	0,0878	in	=	0,0073	ft
ρ	=	densitas dari bahan konstruk	=	489	lb/ft^3			

Beban yang ditanggung tiap kolom

W_{bp} = 0,333333 x 0,25 x 0,00732 x 489

= 0,2982 lb

c. Beban tiap penyangga

Rumus:

Wp = L x A x F x ρ

dimana:

L = tinggi kolom = 16,1401 ft

A = luas kolom I-beam = 0,4369 in^2 = 0,003 ft^2
F = faktor koreksi = 3,4
ρ = densitas dari bahan konstruk = 489 lb/ft^3
Beban tiap penyangga
Wp = 16,14011 x 0,003034 x 3,4 x 489
= 81,4234 lb

d. Beban total
W total = W + Wbp + Wp
= 6986,94442 + 0,2982 + 81,4234
= 7068,6660 lb

Dianggap hanya ada gaya vertikal dan berat kolom itu sendiri bekerja pada pondasi, maka diambil :

- luas atas = 75 x 75 in
- luas bawah = 100 x 100 in
- tinggi = 150 in
- luas permukaan tanah rata-rata:

A = 100 x 100
= 10000 in^2
Volume pondasi
V = A x t
= 0,4369 x 150
= 65,5403 in^3
= 0,037928 ft^3
Berat pondasi
W = V x ρ
dimana:
ρ = densitas semen = 144 lb/ft^3
Maka:
W = 0,037928 x 144
= 5,461691 lb
= 2,476958 kg
Tekanan tanah:
Pondasi didirikan diatas semen, sand dan gravel, dengan:

- Save bearing minimum = 5 ton/ft^2
- Save bearing maksimum = 10 ton/ft^2

Kemampuan tekanan tanah sebesar:

$$P = 5\ ton/ft^2 \times \frac{2204{,}623\ lb}{1\ ton} \times \frac{1\ ft^2}{144\ in^2}$$

= 76,54941 lb/in^2

Tekanan pada tanah:

$$P = \frac{W}{A}$$

dimana:

W = berat beban total + berat pondasi

A = luas bawah pondasi

sehingga:

$$P = \frac{7068,6660 + 5,461691}{10000}$$

$$= 0,70741 \ lb/in^2 < 76,5494 \ lb/in^2$$

Karena tekanan yang diberikan tanah lebih kecil dari pada kemampuan tanah menahan pondasi, maka pondasi dengan ukuran 75 x 75 in untuk luas atas dan 100 x 100 in untuk luas bawah dengan tinggi pondasi 150 in dapat digunakan.

Dimensi Peralatan :

1. Dimensi Absorber

do	=	54	in	=	4,5	ft
di	=	53,625	in	=	4,46875	ft
Ls	=	309,23746	in	=	25,7698	ft
d1	=	2	in	=	0,16667	ft
L1	=	4	in	=	0,33333	ft
tha/thb	=	3/16	in	=	3535,83	ft
ha/hb	=	9,062625	in	=	0,75522	ft
ts	=	3/16	in	=	3535,83	ft
H	=	327,36271	in	=	27,2802	ft

2. Dimensi Nozzle

1. Nozzle liquid masuk

Spesifikasi nozzle standar (Brownell and Young, 1959, App. F item 1 dan 2 hal. 349)

Size	=	1 1/2	in
OD of pipe	=	1,9	in
Flange Nozzle thickness (n)	=	0,2	in
Diameter of hole in reinforcing plate (DR)	=	2	in
Length of side of reinforcing plate, L	=	-	in
Width of reinforcing plate, W	=	-	in
Distance, shell to flange face, outside, J	=	6	in
Distance, shell to flange face, inside, K	=	6	in
Distance from bottom of tank to center of nozzle			
- Regular, Type H	=	6	in

- Low, Type C	=	3		in

2. Nozzle gas masuk

Spesifikasi nozzle standar (Brownell and Young, 1959, App. F item 1 dan 2 hal. 349)

Size	=	18		in
OD of pipe	=	18		in
Flange Nozzle thickness (n)	=	1/2		in
Diameter of hole in reinforcing plate (DR)	=	18	1/8	in
Length of side of reinforcing plate, L	=	39		in
Width of reinforcing plate, W	=	47	5/8	in
Distance, shell to flange face, outside, J	=	10		in
Distance, shell to flange face, inside, K	=	8		in
Distance from bottom of tank to center of nozzle				
- Regular, Type H	=	22		in
- Low, Type C	=	19	1/2	in

3. Nozzle gas keluar top kolom

Spesifikasi nozzle standar (Brownell and Young, 1959, App. F item 1 dan 2 hal. 349)

Size	=	14		in
OD of pipe	=	14		in
Flange Nozzle thickness (n)	=	1/2		in
Diameter of hole in reinforcing plate (DR)	=	14	1/8	in
Length of side of reinforcing plate, L	=	31		in
Width of reinforcing plate, W	=	38		in
Distance, shell to flange face, outside, J	=	10		in
Distance, shell to flange face, inside, K	=	8		in
Distance from bottom of tank to center of nozzle				
- Regular, Type H	=	18		in
- Low, Type C	=	15	1/2	in

4. Nozzle liquid keluar bottom kolom

Spesifikasi nozzle standar (Brownell and Young, 1959, App. F item 1 dan 2 hal. 349)

Size	=	1	1/2	in
OD of pipe	=	1,9		in
Flange Nozzle thickness (n)	=	0,2		in
Diameter of hole in reinforcing plate (DR)	=	2		in
Length of side of reinforcing plate, L	=	-		in
Width of reinforcing plate, W	=	-		in
Distance, shell to flange face, outside, J	=	6		in
Distance, shell to flange face, inside, K	=	6		in

Distance from bottom of tank to center of nozzle

- Regular, Type H = 6 in
- Low, Type C = 3 in

Dari Brownell & Ypung tabel 12.2 halaman 221 diperoleh dimensi flange untuk untuk semua nozzle, dipilih flange standart type welding neck dengan dimensi nozzle:

- Nozzle 1 = Nozzle liquid masuk
- Nozzle 2 = Nozzle gas masuk
- Nozzle 3 = Nozzle gas keluar top kolom
- Nozzle 4 = Nozzle liquid keluar bottom kolom
- NPS = ukuran pipa nominal, in
- A = Diameter luar flange, in
- T = Ketebalan minimum flange, in
- R = Diameter luar bagian yang menonjol, in
- E = Diameter hubungan atas, in
- K = Diameter hubungan pada titik pengelasan, in
- L = Panjang julukan, in
- B = Diameter dalam flange, in

Fig. 12.2, hal 221, Brownell & Young:

Nozzle	NPS	A	T	R	E	K	L	B
1	1 1/2	5	11/16	2 7/8	2 9/16	1,9	2 7/16	1,61
2	18	25	1 9/16	21	19 7/8	18	5 1/2	17,25
3	14	21	1 3/8	16 1/4	15 3/4	14	5	13,25
4	1 1/2	5	11/16	2 7/8	2 9/16	1 8/9	2 7/16	1,61

3. Dimensi Flange, Bolting dan Gasket

a. Bagian flange

Bahan konstruksi = High alloy steel SA-336, Grade F8, Type 304
Tensile stress minimum = 75000
Allowable stress (f) = 17910
ID = 54 in
Tebal = 1,5 in
OD = 60,66 in
Type flange = Loose ring flange type

b. Bagian bolting

Bahan konstruksi = High alloy steel SA-193, Grade B8T, Type 32
Ukuran = 1 3/8 in
Jumlah = 8 buah
Bolt circle diameter (C) = 57,90596 in

Jarak dari tepi	=	1,375	in
Jarak radial minimum	=	1,875	in

c. Bagian gasket

Bahan konstruksi	=	Solid flat metal (stainlees steel)	
Gasket faktor (m)	=	6,5	in
design seating stress	=	26000,0	psia
Tebal gasket	=	0,1226	in

4. Sistem Penyangga

- Kolom penyangga = 4 buah
- Jenis kolom = I-beam
- b = 2,796 in
- h = 4 in
- Ay = 2,76 in^2
- r = 1,56 in

5. Base Plate

Dari tabel 10.4 hal. 188 Brownell & Young, didapatkan baut dengan ukuran 0,5 in adalah :

Ukuran	=	0,5	in
Root area	=	0,126	in
Bolt spacing	=	1 1/4	in
Minimum radial distance	=	1 3/16	in
Edge distance	=	5/8	in
Nut dimension	=	7/8	in
Maximum fillet radius	=	1/4	in

6. Dimensi lug dan gusset

- lug

lebar	=	9,5000	in
tebal	=	0,5985	in
tinggi	=	11,1970	in

- gusset

lebar	=	5,5000	in
tebal	=	0,2244	in
tinggi	=	10,0000	in

7. Dimensi Pondasi

- luas atas	=	75	x	75	in
- luas bawah	=	100	x	100	in
- tinggi	=	150	in		

- Bahan = semen, sand dan gravel
- Luas permukaan tanah rata-rata = 10000 in^2

8. Nozzle Manhole

Lubang manhole dibuat berdasarkan standar yang ada yaitu : 20 inch

(Brownell & Young hal.51, Fig. 3.15)

Berdasarkan fig. 12.2 Brownell & Young hal.221, didapatkan dimensi pipa :

Ukuran pipa nominal (NPS)	:	20
Diameter luar pipa (A)	:	27,5
Ketebalan flange minimum (T)	:	1,69
Diameter bagian lubang menonjol (R)	:	23
Diameter lubang pada titik pengelasan (K)	:	20
Diameter hubungan pada alas (E)	:	22
Panjang julikan (L)	:	5,69
Diameter dalam flange (B)	:	19,3
Jumlah lubang baut	:	20
Diameter	:	1,13